GYMO
ARCHITECTURE
ENGINEERING
ENVIRONMENTAL
LAND SURVEYING

Edward G. Olley, Jr., AIA
William P. Plante, PLS
Patrick J. Scordo, PE
Ryan G. Churchill, PE
Scott W. Soules, AIA

Gregory F. Ashley, PLS
Michael P. Merithew, PLS
Brandy W. Lucas, MBA

In Consultation
Leo F. Gozalkowski, PLS
Stephen W. Yaussi, AIA

24 March 2015

Mr. Kenneth Mix
City of Watertown
245 Washington St
Watertown, NY 13601

Re: Proposed Convenience Store – Washington Street

File: 2014-033E

We have reviewed your correspondence dated October 27, 2014 and offer the following responses. Our responses correspond to your comments and are shown in bold. We have attached the following drawings for review at the 7 April 2015 Planning Board meeting:

- 3 full size and (13) 11"x17" size sets of Site Development and Architectural drawings (compiled together), and
- 3 full size and (13) 11"x17" Survey Maps

Note: Due to specific levels of expertise, both JS Hagan Architects and GYMO, DPC have contributed to the attached drawing set. This submittal attempts to avoid duplication. This correspondence describes where the specific drawing revisions can be viewed.

1. The applicant shall label all curb radii.

   Agreed. Refer to JS Hagan Site and Landscaping Plan.

2. The applicant shall provide a traffic study and modify the curb cuts and driveways as directed by the City Engineer.

   Completed. Refer to previously submitted Traffic Impact Assessment by GTS Consulting.

3. The applicant shall relocate the Washington Street driveway such that the typical wheel path does not cross the existing catch basin.

   Agreed. Refer to GYMO Utility and ESC Plan and JS Hagan Site and Landscaping Plan.

4. The applicant shall provide striping and flow arrows for Hudson Lane, and depict additional detail on its curb tie-in on the grading plan.

   Agreed. Refer to JS Hagan Site and Landscaping Plan.

5. The Washington Street sidewalk shall be depicted on the Utility and ESC Plan.

   Disagreed. The owners have requested removal of this sidewalk since it does not connect to an existing sidewalk to the south of the site.

6. The applicant shall maintain the asphalt multi-use trail to the same standard as a sidewalk, including clearing snow and maintaining a level surface.

   Agreed. However, the surface will be restored to existing elevations (which is not a level surface). For slopes refer to the JS Hagan Grading Plan.

7. Roof drainage and roof leader locations shall be depicted on the drainage plan.

   Agreed. Roof leaders are shown exiting the proposed building and canopy and entering the nearest catch basin. Refer to JS Hagan Grading Plan and GYMO Utility and ESC Plan.

8. The applicant shall demonstrate that the stormwater treatment plan is sufficient to provide the required quantity treatment for a 100-year storm.

   Agreed. However, GYMO hereby requests that the SWPPP and the requirement to provide construction level details and calculations be a condition of Site Plan approval.

9. The applicant shall revise the plan so that the headwall and outlet on the west side of Washington Street remain intact, and provide an alternate diversion structure to direct flow into the new pipes, rather than making a direct underground connection.

   Disagreed. GYMO recommends removal of the western headwall and the construction of a closed storm drainage system for health and safety and aesthetic reasons. Numerous discussions have occurred with the City Engineer on this issue and it is our understanding that a closed drainage system will be acceptable and City ownership/maintenance will cease at (but will exclude) the first three storm manholes labeled STMH'S 1, 2, and 3 on the GYMO Utility and ESC Plan.

10. The Engineering Report shall be revised to include 100-year storm calculations for the offsite stormwater culverts, and demonstrate that the Washington Street catch basins will not be adversely impacted by the elimination of the open swale.

    GYMO hereby requests that the requirement to provide construction level details and calculations be a condition of Site Plan approval.

11. The applicant shall acquire approval for work within the National Grid easement and provide copies of all correspondence to the Engineering Department.

    Agreed. However GYMO hereby requests that the requirement to provide National Grid approval documentation be a condition of Site Plan approval.

12. The applicant shall acquire approval of NYSDEC for hard-piping the swale.

    GYMO contacted the NYS DEC and received verification that the NYSDEC is not requiring review or approval for hard-piping the swale.

    A Stormwater Pollution Prevention Plan and Notice of Intent will also be required by NYSDEC.

    Agreed. However GYMO hereby requests that the SWPPP and the requirement to provide construction level details and calculations be a condition of Site Plan approval.

    The Erosion and Sediment Control plan and the SWPPP shall include protection of City owned catch basins in the vicinity of the project.

    Agreed. However GYMO hereby requests that the SWPPP and the requirement to provide construction level details and calculations be a condition of Site Plan approval.

13. The applicant shall include a note requiring replacement of the 4" underdrain in Washington Street, if encountered during excavation.

    Agreed. Refer to JS Hagan Site and Landscaping Plan.

14. The applicant shall demonstrate that water supply pressure is sufficient.

    GYMO has been unable to perform hydrant flow tests due to the frozen conditions the past several months. However, in August 2012, GYMO installed a pressure gauge on the hydrant located at the intersection of Algonquin Ave. and Washington Street and obtained a static reading of 52 psi. The next hydrant south, located at the northwest intersection of Washington Street and Hudson Lane, was then flowed at 920 gpm, producing a residual pressure of 38 psi at the monitored hydrant. These results may not be demonstrative since the Nice N Easy site is located several feet up gradient and tests in this area could yield lower results. Once the weather permits, GYMO will conduct a flow test on the project location and forward results to the City Engineering Department.

15. The westernmost water main in Washington Street is abandoned and shall be marked as such on the utility plan and survey.

    Agreed. Refer to GYMO Utility and ESC Plan and Survey.

16. A note shall be added to the plan "All water main and service work must be coordinated with the City of Watertown Water Department, Water Department requirements supercede all other plans and specifications provided."

    Agreed. Refer to the General Notes sheet and JS Hagan Site and Landscape Plan.

17. The applicant shall demonstrate that anticipated water usage is calculated appropriately based on DEC guidelines, and seek a permit if necessary.

    Disagreed. Water usage calculations were based on actual water meter readings from similar Nice N Easy convenient stores and donut shops which is much more accurate than typically conservative flow data that would be calculated from NYSDEC guidelines. Since anticipated flow sewage demand is well below 2500gpd, NYSDEC sewer review and approval is not required.

18. The applicant shall acquire a permit from NYSDOH for placing sewer facilities in close proximity to a drilled well water supply. The Town of Watertown should also be contacted, as one of the well heads is within their jurisdiction.

    GYMO contacted both the NYS DOH and the Town of Watertown and neither has jurisdictional authority over the adjacent wells. GYMO also contacted the Office of General Services and they stated the wells are abandoned and the well pumps were removed.

19. Two large maturing street trees spaced 40' on center, along with planting beds, shall be added along Washington Street north of the entrance/exit area and four large maturing street trees spaced 40' on center shall be added on the northwest side of the site, starting at the City boundary and ending just before the electric easement.

    Agreed. Refer to JS Hagan Site and Landscaping Plan.

20. Two 2" diameter, large maturing street trees shall be planted in the Howell Road right-of-way, spaced evenly in between the existing trees, as replacements for the City tree that is required to be moved.

    Agreed. Refer to JS Hagan Site and Landscaping Plan.

21. Planting beds shall be added around the sign, at the entrance/exit areas and along the rear of the building.

    Agreed. Refer to JS Hagan Site and Landscaping Plan.

22. The applicant shall provide a separate Landscaping Plan that calls out all tree removals, and includes a planting schedule with species and size information.

    Agreed. Refer to JS Hagan Site and Landscaping Plan.

23. For site features located outside the City boundary; any permits, conditions, or requirements effected by the Town of Watertown shall supercede this site plan approval.

    Agreed.

24. The applicant shall revise the survey to include all existing and proposed easements in the site, and add more detail for areas east of Washington Street, including utility and topographic information for the ditch east of the curb line, and the area around the sanitary sewer connection and offsite metering manhole.

    Agreed. Refer to the GYMO Utility and ESC Plan. The Survey Plan represents existing conditions only. We request that a condition of Site Plan approval be providing a drainage easement map in accordance with City requirements.

25. The survey and plans shall be revised to depict the correct setbacks-the front yard should be on the Washington Street side.

    Agreed. Refer to revised survey by GYMO and JS Hagan Site and Landscaping Plan.

26. The plan sets shall be consolidated into a single bound package.

    Agreed.

27. Snow storage areas shall be delineated.

    Agreed. Refer to JS Hagan Site and Landscaping Plan.

28. The applicant shall depict the gas marker in the Hudson Lane Driveway and call out relocations.

    Agreed. Refer to GYMO Utility and ESC Plan.

29. The applicant must coordinate with the Engineering Department and provide all required details prior to applying for a building permit.

    Agreed.

Comments via email dated October 31, 2014 from Brian Drake, PE, City of Watertown Engineering Department follow:

- Indicate where the applicant is proposing the riprap slope detail vs. the flared end section detail. Also, there are differing end section details in the Jim Hagan and GYMO plans. Delete the unused details.

  Agreed. Slope protection via rip-rap is not anticipated for the project, and the rip rap slope detail has been removed. Rip-rap is proposed at culvert/storm pipe end

sections. Refer to the GYMO Utility and ESC Plan and Details sheet C501.

- A standard catch basin detail is included in both sets of plans. Only one catch basin detail should be included in the set.

  Agreed. Refer to revised GYMO Details sheet C502.

- Provide the following details:

  - Asphalt Pavement Section Detail for the proposed parking lot

    Agreed. Refer to JS Hagan details.

  - Cut sheet and design of the proposed grease trap

    Agreed. Refer to JS Hagan details.

  - Detail of Sidewalk Ramp

    Agreed. Refer to JS Hagan details.

  - City Sidewalk Detail

    Agreed. Refer to JS Hagan details.

  - City Sidewalk Detail across driveways

    Agreed. Refer to JS Hagan details.

  - Detail of curb within City R.O.W.

    Agreed. Refer to JS Hagan details.

  - Curb Wipedown detail

    Agreed. Refer to JS Hagan details.

  - Asphalt Pavement Section Detail for areas within the City R.O.W. & concrete road repair.

    Agreed. Refer to JS Hagan details.

  - Lightpole Detail

    Agreed. Refer to JS Hagan details.

  - Detail of typical lawn area installation

    Agreed. Refer to JS Hagan details.

  - Pump station schedule

    Agreed. Refer to GYMO Details sheet C503.

  - Stormwater Pond and Profile

    Agreed. Refer to GYMO Details sheet C501 and C502 for the storm water management area (dry swale) which includes, plan and cross section views

of the swale.

- Detail of Pond outlet structure

  Agreed. Refer to GYMO Details sheet C503.

- One Way, Do Not Enter Sign Details

  Agreed. Refer to JS Hagan details.

- Bike Trail crosswalk detail & shown on plan – address ADA and PROW AG.

  Agreed. Refer to JS Hagan details.

We trust these responses are satisfactory.

If there are any questions or you require additional information, please feel free to contact our office.

Sincerely,
GYMO, Architecture, Engineering & Land Surveying, DPC

Patrick J. Scordo, P.E.
Director of Engineering

Attachments

PC: Ed and John Valentine, with encls.
Jim Hagan, RA – JS Hagan Architects, with encls.
Thomas H. Ross – GYMO

X:\2014\2014-033\City Response Letter_Nice and Easy Washington_3.16.15.docx

VALENTINE STORES, INC.
NICE AND EASY CONVENIENCE STORE

US ROUTE 11 (WASHINGTON STREET)
CITY/TOWN OF WATERTOWN, JEFFERSON COUNTY, NEW YORK

SITE DEVELOPMENT PLANS

24 MARCH 2015

INDEX OF DRAWINGS:

C001 - GENERAL NOTES AND INFORMATION
A - 1 - SITE AND LANDSCAPING PLAN
A - 2 - GRADING PLAN
A - 2A - DIMENSION AND DETAIL PLANS
C101 - UTILTY AND ESC PLAN
A - 3 - SITE DETAILS
C501 - SITE DETAILS
C502 - SITE DETAILS
C503 - SITE DETAILS
C504 - MPT DETAILS
A - 4 - FLOOR PLAN
A - 5 - ELEVATIONS
PHOTOMETRIC PLAN
LIGHTING INFORMATION

APPLICANT/CONVENIENT STORE OWNER:

VALENTINE STORES, INC.
PO BOX 840
WATERTOWN, NY 13601
CONTACT: MR. ED VALENTINE
(315) 778-9950

PREPARED BY:

GYMO PC
ARCHITECTURE
ENGINEERING
LAND SURVEYING

220 Sterling Street
Watertown, New York 13601
tel: (315) 788-3900
fax: (315) 788-0668
www.gymopc.com

2014-033E
NICE AND EASY CONVENIENCE STORE
VALENTINE STORES, INC.
US ROUTE 11 - CITY/TOWN OF WATERTOWN, NEW YORK

ABBREVIATIONS

AC – ACRES
BLDG – BUILDING
BOT –BOTTOM
BW – BOTTOM OF WALL
C – CURVE
CB – CATCH BASIN
CF – CUBIC FEET
CI – CAST IRON
CL – CENTERLINE
CO – COUNTY
CONC – CONCRETE
CMP – CORRUGATED METAL PIPE
CPP – CORRUGATED PLASTIC PIPE
DA – DELTA ANGLE
DA# – DRAINAGE AREA #
DI – DUCTILE IRON
DIA – DIAMETER
DWG – DRAWING
DYLL– DOUBLE YELLOW LANE LINE
E – EAST
EG – EXISTING GRADE
EL – ELEVATION
ESC – EROSION & SEDIMENT CONTROL
FF – FINISHED FLOOR
FG – FINISH GRADE
GV – GATE VALVE
HDPE – HIGH DENSITY POLYETHYLENE PIPE
HYD – HYDRANT
IPF – IRON PIPE FOUND
IPS – IRON PIPE SET
INT – INTERSECTION
INV – INVERT
L – LENGTH
LF – LINEAR FEET
MAX – MAXIMUM
MIN – MINIMUM
N – NORTH
NA – NOT APPLICABLE
NO./# – NUMBER
NTS – NOT TO SCALE
NYSDEC – NEW YORK STATE DEPARTMENT OF ENVIRONMENTAL CONSERVATION
NYSDOT – NEW YORK STATE DEPARTMENT OF TRANSPORTATION
NYSDOH – NEW YORK STATE DEPARTMENT OF HEALTH
OHW – OVERHEAD WIRE
PC – POINT OF CURVATURE
PCC – POINT OF COMPOUND CURVE
PT – POINT OF TANGENCY
PVC – POLYVINYL CHLORIDE PIPE
R – RADIUS
RCP – REINFORCED CONCRETE PIPE
ROC – RUN OF CRUSHER
ROW – RIGHT–OF–WAY
S – SOUTH
SAN – SANITARY
SDR – STANDARD DIMENSION RATIO
SNMH – SANITARY MANHOLE
STMH – STORM MANHOLE
SWLL – SOLID WHITE LANE LINE
SWPPP – STORM WATER POLLUTION PREVENTION PLAN
TC – TIME OF CONCENTRATION
TL – TANGENT LENGTH
TYP – TYPICAL
TW – TOP OF WALL
TS & V – TAPPING SLEEVE & VALVE
UNO – UNLESS NOTED OTHERWISE
W – WEST

MASTER LEGEND

LEGEND:	EXISTING	PROPOSED
5' CONTOUR	410	410
1' CONTOUR	409	409
BOLLARD		
BUILDING		
BUSH		
CATCH BASIN		
CENTERLINE		
CLEANOUT		
CONCRETE SIDEWALK	CONC. SIDEWALK	
CONIFEROUS TREE		
CURB STOP		
CURBED ROAD		
DECIDUOUS TREE		
EASEMENT		
EDGE OF PAVEMENT		
ELECTRICAL BOX		E
ELECTRIC MANHOLE	E	
FENCE	x x x	
FIRE HYDRANT		
FLOWERING PLANTINGS		
GAS LINE	G	G
GUIDERAIL		
5/8" IRON PIPE WITH CAP SET		
IRON PIPE FOUND (AS NOTED)		
LANDSCAPING		
LIGHT POLE		
OVERHANG		
PAINTED LINES		
PROPERTY LINE		
SAWCUT		
SEWER LINE	SN	SN
SEWER MANHOLE	S	S
SIGNS		
SILT FENCE		
SOLID WHITE LANE LINE		
SPOT ELEVATION		578.12 +
STORM LINE	ST	ST
STORM MANHOLE	D	D
TEST PIT LOCATION		
TOP OF CURB/BOTTOM OF CURB		578.62/578.12 +
TREELINE		
UNDERGROUND CABLE AND TELEPHONE		CT
UNDERGROUND ELECTRIC	E	E
UNDERGROUND GAS, ELECTRIC, TELEPHONE		GET
UNDERGROUND TELEPHONE		T
UNDERGROUND GAS, ELECTRIC, TELEPHONE AND CABLE		GETC
UTILITY POLE & GUY WIRE	Ø	
WATER LINE	W	W
WATER OUTLINE		
WATER VALVE	WV	WV
WATERLINE CROSSING		XING
WETLANDS		

PLANNING DATA (CITY OF WATERTOWN)

CURRENT ZONING CLASSIFICATION - COMMERCIAL

AREA AND BULK CALCULATIONS

ITEM	REQUIRED/ALLOWED (IN COMMERCIAL ZONING)	PROPOSED
LOT AREA	40,000 SF	+/- 2.91 ACRES
FRONT YARD SETBACK	20'	50'
SIDE YARD SETBACK	5'	124', 95'
REAR YARD SETBACK	25'	95'
BUILDING COVERAGE	N/A	
PARKING	1 SPACE / 200 SF = 5,800 SF BUILDING / 200 = 29 SPACES	35 SPACES

GENERAL NOTES

1. UNDERGROUND FACILITIES, STRUCTURES AND UTILITIES HAVE BEEN PLOTTED FROM AVAILABLE SURVEYS AND RECORDS, AND THEREFORE THEIR LOCATIONS MUST BE CONSIDERED APPROXIMATE ONLY. THERE MAY BE OTHERS, THE EXISTENCE OF WHICH IS PRESENTLY NOT KNOWN. PRIOR TO CONSTRUCTION CONTACT UNDERGROUND UTILITIES CALL CENTER OF NEW YORK FOR EXACT LOCATION OF ALL UNDERGROUND UTILITIES, (1–800–962–7962). CONTRACTOR IS RESPONSIBLE FOR LOCATING AND WORKING WITH THE APPROPRIATE UTILITY COMPANIES PRIOR TO CONSTRUCTION.

2. THE TOPOGRAPHIC, PLANIMETRIC, AND BOUNDARY SURVEY WAS PERFORMED BY GYMO, P.C. BETWEEN JULY AND SEPTEMBER 2014.

3. ALL OUT–OF–SCOPE AREAS DISTURBED BY THE CONTRACTOR'S OPERATIONS WILL BE RESTORED TO CONDITIONS EQUAL TO OR BETTER THAN THAT PRIOR TO CONSTRUCTION. OUTSIDE OF PROPERTY BOUNDARIES AND EASEMENT AREAS THE CONTRACTOR IS REMINDED TO OBTAIN WRITTEN AUTHORIZATION TO USE PRIVATE PROPERTY AND ASSUMES ALL LIABILITY WHEN ACCESSING THOSE PROPERTIES.

4. THE CONTRACTOR IS RESPONSIBLE FOR VERIFYING THE CHARACTERISTICS AND EXTENT OF SUBSURFACE SOILS, ROCK, WATER TABLE LEVELS, ETC., PRIOR TO BIDDING.

5. THE CONTRACTOR SHALL BE RESPONSIBLE FOR OBTAINING ALL PERMITS, SECURITY, BONDS, FEES, AND PAYMENTS TO OBTAIN SAID PERMITS WHERE APPLICABLE.

6. WHEN THE PERFORMANCE OF THE CONTRACTOR'S WORK REQUIRES THE INTERRUPTION OF UTILITY SERVICES, HE/SHE SHALL ISSUE A 48 HOUR PRIOR NOTICE TO THE GOVERNING MUNICIPALITY.

7. SITE CONTRACTOR TO PROVIDE EROSION AND SEDIMENT CONTROL AND DUST CONTROL.

8. A LICENSED LAND SURVEYOR SHALL BE RETAINED FOR ALL UTILITY AND FIELD STAKEOUT AND AS–BUILTS AT THE CONTRACTORS EXPENSE.

9. CONTRACTOR SHALL MAINTAIN ALL EROSION CONTROL MEASURES THROUGHOUT CONSTRUCTION UNTIL ESTABLISHMENT OF VEGETATIVE COVER. RUN–OFF CONTAINING SEDIMENTS FROM DISTURBED AREAS OF THE SITE SHALL NOT BE ALLOWED DIRECTLY OFF SITE OR INTO NATURAL STREAM CHANNELS.

10. ALL EXISTING FACILITIES (I.E.: TREES, PAVEMENT, CURBING, BUILDINGS, ETC.) TO REMAIN SHALL BE PROTECTED BY THE CONTRACTOR. CONSTRUCTION ACTIVITIES ADJACENT TO EXISTING FACILITIES TO REMAIN SHALL BE CONDUCTED TO REDUCE THE IMPACT TO THEM, TO THE MAXIMUM EXTENT PRACTICAL. ANY DAMAGE TO EXISTING FACILITIES TO REMAIN SHALL BE REPAIRED OR THE REPLACED, AS DIRECTED BY THE OWNER AT THE CONTRACTORS EXPENSE.

11. CONTRACTOR SHALL PERFORM ALL R.O.W. CONNECTION AND/OR ADJACENT WORK IN ACCORDANCE WITH NYSDOT SPECIFICATIONS. ALL R.O.W. WORK SHALL BE IN ACCORDANCE WITH NYSDOT MAINTENANCE AND PROTECTION OF TRAFFIC REGULATIONS, INCLUDING FLAGMEN, BARRICADES, WARNING SIGNS/LIGHTS, ETC., WHERE WARRANTED.

12. CONTRACTOR SHALL BE RESPONSIBLE FOR CLEARING, GRUBBING, CUTTING AND DISPOSING OF VEGETATION, TREES AND DEBRIS IN A NYSDEC ACCEPTABLE LOCATION.

13. CONTRACTOR SHALL PERFORM ALL NECESSARY EARTHWORK, INCLUDING THE STRIPPING, STOCKPILING AND REPLACING OF TOPSOIL IN ACCORDANCE WITH THE PLANS. EXCESS MATERIAL SHALL BE REMOVED FROM THE SITE.

14. EXCAVATIONS SHALL BE TO DEPTHS SHOWN ON DRAWINGS. ALL UNSTABLE OR UNSUITABLE MATERIAL SHALL BE EXCAVATED AND REMOVED TO SUCH DEPTH AS REQUIRED TO PROVIDE SUFFICIENT BEARING CAPACITY. OVER–EXCAVATED AREAS SHALL BE BACKFILLED WITH SUITABLE MATERIAL.

15. COMPACTION OF PIPE BEDDING AND BACKFILL MATERIAL SHALL BE BY MEANS OF HAND–GUIDED POWER DRIVEN, DRUM–TYPE, OR PLATE TAMPERS. BACKFILLING SHOULD PROCEED IN ACCORDANCE WITH LIFT THICKNESSES AND COMPACTION REQUIREMENTS AS SHOWN ON THE DRAWINGS. UNLESS OTHERWISE NOTED ON THE DRAWINGS, COMPACTION REQUIREMENTS REFER TO PERCENT OF MAXIMUM DRY DENSITY AS DETERMINED IN ACCORDANCE WITH ASTM–D698, STANDARD PROCTOR. CARE SHALL BE TAKEN TO SHAPE PIPE BEDDING TO FIT THE LOWER PART OF THE PIPE. BACKFILLING AND COMPACTION SHOULD PROGRESS EVENLY ALONG THE PIPE SIDEWALLS AND TO THE TOP OF THE PIPE BEDDING.

16. COMPACTION SHALL BE 90% MAXIMUM DRY DENSITY IN GRASS AREAS, 95% MAXIMUM DRY DENSITY IN GRAVEL/PAVED AREAS AND 98% MAXIMUM DRY DENSITY UNDER AND AROUND STRUCTURES. MAXIMUM DRY DENSITY SHALL BE AS DETERMINED BY ASTM–D698, STANDARD PROCTOR. THE CONTRACTOR SHALL HIRE AN INDEPENDENT TESTING AGENCY TO PERFORM PAVEMENT TESTING PER TECHNICAL SPECIFICATIONS AND PROVIDE THE RESULTS TO THE OWNER FOR REVIEW PRIOR TO FINAL PAYMENT.

17. THE CONTRACTOR SHALL NOTIFY THE ENGINEER OF ANY DISCREPANCIES OF DIMENSIONS, ELEVATIONS AND LOCATIONS DURING PRECONSTUCTION FIELD VERIFICATION, SUCH INFORMATION SHALL BE BROUGHT TO THE ATTENTION OF THE ENGINEER FOR VERIFICATION OR MODIFICATION OF THE PLANS.

18. THE CONTRACTOR SHALL DELIVER TO THE OWNER, AN AS–BUILT SURVEY, SIGNED AND SEALED BY A LAND SURVEYOR OR ENGINEER LICENSED IN THE STATE OF NEW YORK. AS–BUILT RECORD DRAWINGS SHALL INCLUDE, AS A MINIMUM, THE FOLLOWING INFORMATION AS WELL AS ALL REQUIREMENTS OF THE SPECIFICATION:

* RECORD OF ALL UTILITIES ENCOUNTERED IN TRENCH EXCAVATION. INFORMATION SHALL INCLUDE DIAMETER OF UTILITY, DEPTH OF BURIAL AND LOCATION WITH REFERENCE TO NEAREST STRUCTURE SHOWN ON DRAWINGS. THIS INFORMATION SHALL BE KEPT CURRENT ON A WEEKLY BASIS. FAILURE TO DO SO MAY RESULT IN WITHHOLDING OF PAYMENTS.
* DISTANCE TIES TO ALL MANHOLES, CLEAN OUTS, CATCH BASINS, ETC.
* UTILITY REPAIRS, SIDEWALK, AND DRIVEWAY REPLACEMENTS CENTERLINE.
* RIM AND INVERT ELEVATIONS AND HORIZONTAL LOCATION OF MANHOLES, CATCH BASINS, AND CLEANOUTS.
* STATIONS OF BENDS AND VALVES.
* FINAL GRADE ELEVATIONS TO NEAREST 0.1–FOOT AND FINISHED FLOOR ELEVATIONS.
* DENOTED BENCH MARK REFERENCES USED.
* PERIODIC OFFSETS
* NOTATION FROM THE ENGINEER OR SURVEYOR THAT THE GRADES ARE IN CONFORMANACE WITH THE SITE PLANS.
* RECORD DETAILS NOT SHOWN ON THE ORIGINAL CONTRACT DOCUMENTS. ANY FIELD CHANGES OF DIMENSIONS AND DETAILS AND ANY CHANGES MADE BY CHANGE ORDER OR FIELD ORDER.
* CERTIFICATE OF SUBSTANTIAL COMPLETION SHALL NOT BE ISSUED UNTIL AS–BUILT INFORMATION IS ACCEPTABLE.
* TWO (2) SETS OF FINAL COMPLETE RECORD DRAWINGS. CONTRACTOR SHALL FURNISH AS–BUILT DATA ON PLAN SHEETS.

19. UPON COMPLETION OF STORM SEWER FACILITIES AND ESTABLISHMENT OF VEGETATION, THE NEW AND EXISTING STORM SYSTEMS RECEIVING RUNOFF FROM THIS SITE SHALL BE CLEANED OF DEBRIS. ONLY AT THIS TIME SHALL THE EROSION AND SEDIMENTATION CONTROL MEASURES BE REMOVED.

20. CONTRACTOR SHALL PROVIDE SATISFACTORY DEWATERING AND DRAINAGE OF EXCAVATIONS.

21. THE CONTRACTOR IS RESPONSIBLE FOR MAKING SURE THAT AREA ROADS AND PARKING FACILITIES ARE CLEAR OF DEBRIS AND MUD ON A DAILY BASIS DURING THE ENTIRE CONSTRUCTION PROCESS.

22. EXCAVATIONS AND TRENCHING SHALL BE PERFORMED IN ACCORDANCE WITH STATE OF NEW YORK INDUSTRIAL CODE, RULE 23, O.S.H.A. TITLE 29, PART 1926, NEW YORK STATE DEPARTMENT OF LABOR, TITLE 12, PART 23, AND ALL OTHER APPLICABLE SAFETY STANDARDS AND CODES.

23. IT IS THE CONTRACTOR'S RESPONSIBILITY TO BE AWARE OF AND TO CONFORM WITH ALL RULES AND RESPONSIBILITIES ASSOCIATED WITH PROVIDING A SAFE WORK PLACE. THE CONTRACTOR MUST COMPLY WITH OSHA 29 CFR PART 1926, SAFETY AND HEALTH REGULATIONS FOR CONSTRUCTION.

24. A STORM WATER POLLUTION PREVENTION PLAN (SWPPP) WILL BE PREPARED FOR THIS PROJECT.

25. ALL WORK TO BE PERFORMED WITHIN THE CITY OF WATERTOWN MARGIN WILL REQUIRE SIGN–OFF FROM A PROFESSIONAL ENGINEER, LICENSED AND CURRENTLY REGISTERED TO PRACTICE IN THE STATE OF NEW YORK, THAT THE WORK WAS BUILT ACCORDING TO THE APPROVED SITE PLAN AND APPLICABLE CITY OF WATERTOWN STANDARDS. COMPACTION TESTING WILL BE REQUIRED FOR ALL WORK TO BE PERFORMED WITHIN THE CITY OF WATERTOWN MARGIN AND MUST BE SUBMITTED TO THE CITY OF WATERTOWN CODES DEPARTMENT.

26. PLEASE NOTE THAT ANY CONTRACTOR WORKING WITHIN THE CITY OF WATERTOWN MUST PROVIDE A CURRENT CERTIFICATE OF LIABILITY INSURANCE (ACORD 25). IN ADDITION, NYS ALSO MANDATES PROOF OF WORKER'S COMPENSATION BE SHOWN PRIOR TO THE ENGINEERING DEPARTMENT ISSUING ANY PERMITS.

27. UNDERGROUND PRIMARY ELECTRIC SERVICE BY OTHERS. CONTRACTOR TO COORDINATE WITH UTILITY COMPANY FOR DESIGN.

28. ALL WATER MAIN AND SERVICE WORK MUST BE COORDINATED WITH THE CITY OF WATERTOWN WATER DEPARTMENT. WATER DEPARTMENT REQUIREMENTS SUPERCEDE ALL OTHER PLANS AND SPECIFICATIONS PROVIDED.

REVISION	DESCRIPTION	DATE
1	CITY OF WATERTOWN COMMENTS	3/24/2015

FOR APPROVALS ONLY
NOT FOR CONSTRUCTION

GYMO PC
ARCHITECTURE ENGINEERING LAND SURVEYING
228 Sterling Street
Watertown, NY 13601
tel: (315) 788-3900
fax: (315) 788-0668
www.gymopc.com

COPYRIGHT © 2014
GYMO
ARCHITECTURE, ENGINEERING & LAND SURVEYING, P.C.

IT IS A VIOLATION OF SECTION 7209, SUBDIVISION 2, OF NEW YORK STATE EDUCATION LAW FOR ANY PERSON UNLESS ACTING UNDER THE DIRECTION OF A LICENSED PROFESSIONAL ENGINEER OR LAND SURVEYOR TO ALTER THIS DOCUMENT IN ANY WAY. IF ALTERED, SUCH LICENSEE SHALL APPLY HIS OR HER SEAL AND THE NOTATION "ALTERED BY" FOLLOWED BY HIS OR HER SIGNATURE, DATE AND A SPECIFIC DESCRIPTION OF ALTERATION.

GENERAL NOTES AND INFORMATION

VALENTINE STORES, INC.
WASHINGTON STREET, CITY/TOWN OF WATERTOWN
JEFFERSON COUNTY, NEW YORK

Project No:	2014-033E
Scale:	As Noted
Date:	10-14-2014
Drawn By:	THR/MJB
Designed By:	THR/PJS
Checked By:	
Date Issued:	10-16-2014
Drwg. No.	

C001

THESE DRAWINGS SHALL NOT BE ALTERED MANUALLY OR ELECTRONICALLY WITHOUT THE WRITTEN AUTHORIZATION OF THE ARCHITECT. VIOLATORS WILL BE PROSECUTED. THIS DRAWING IS AND SHALL REMAIN THE PROPERTY OF THE ARCHITECT. IT IS TO BE USED ONLY WITH RESPECT TO THIS PROJECT.
© 2014 J. S. HAGAN, ARCHITECT

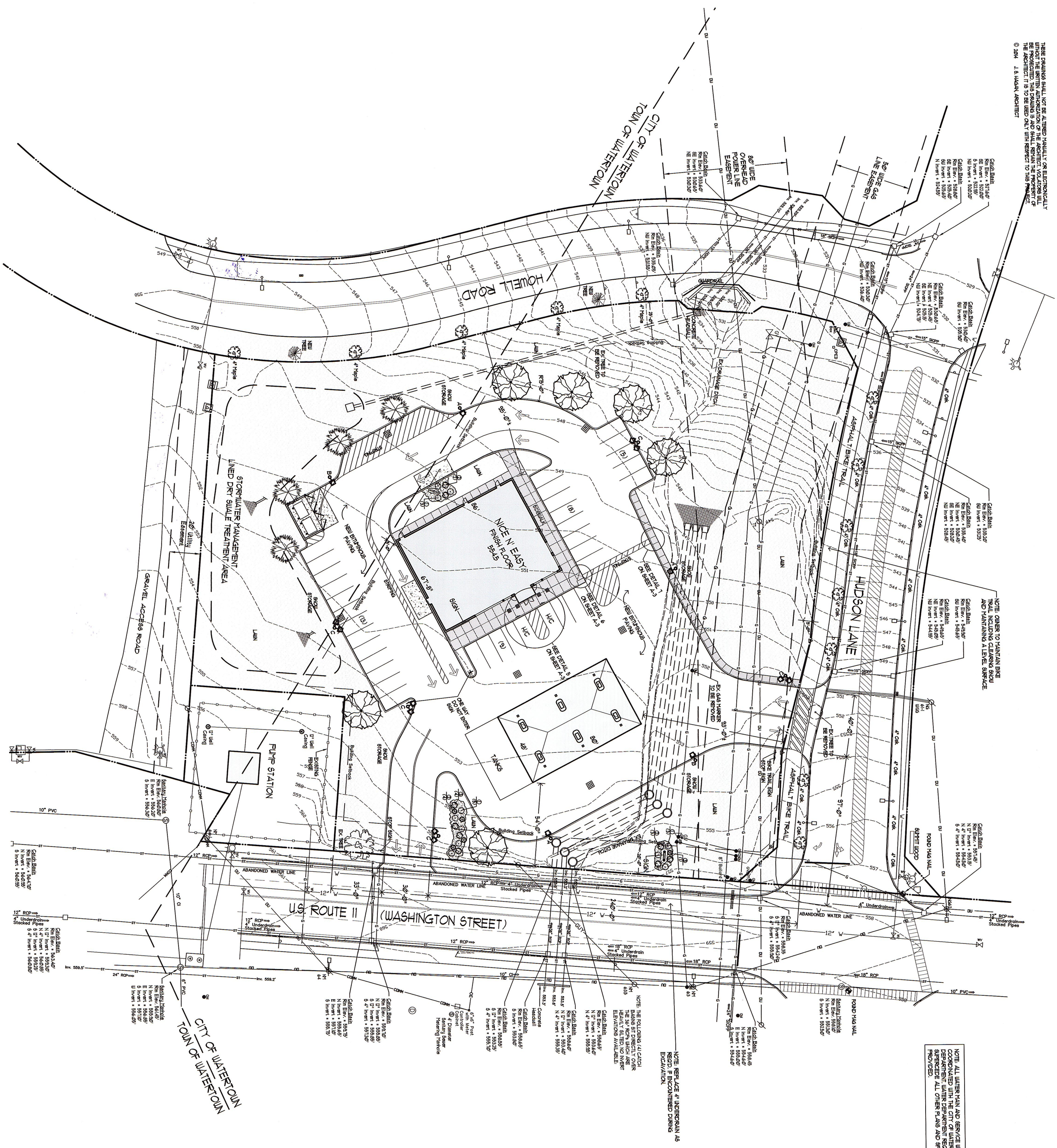

LOCATION MAP
NO SCALE

EXISTING SITE CONDITIONS TAKEN FROM MAPS PREPARED BY GYMO PC DATED 31 JANUARY 2014

SITE TABULATION

SITE AREA	126,934 SQFT±	2.91 ACRES±
PROPOSED BUILDING	5,936 SQFT	
SITE COVERAGE	7.6% (9,736 SQFT)	
PARKING REQUIRED	5 / 1000 SQFT = 29 SPACES	
PARKING PROVIDED	35 SPACES	

LEGEND

- EXISTING CONTOUR
- NEW CONTOUR
- NEW SPOT GRADE
- NEW CONCRETE SIDEWALK
- LAWN AREA
- CONCRETE PAD
- EXISTING TREE TO BE REMAIN
- EXISTING TREE TO BE REMOVED
- NEW AMUR MAPLE, B&B 3" CALIPER
- NEW AUSTRIAN PINE, PINUS NIGRA, 4-5' TALL, B&B
- NEW AMERICAN HORNBEAM, B&B 2" CALIPER
- NEW MULCH BED
- NEW YEW, TAXUS BACCATA, B&B
- NEW JUNIPER, JUNIPERUS, B&B
- NEW SPIRAEA, B&B
- A — CREE INC. LED LIGHT FIXTURE MOUNTED ON A 20' POLE W/ A 2' BASE AND 1 HEAD PER POLE. ARE-EDG-3*1B-DA-08-E-UL-UH-525
- B — CREE INC. LED LIGHT FIXTURE MOUNTED ON A 20' POLE W/ A 2' BASE AND 1 HEAD PER POLE. ARE-EDG-4*1B-DA-08-E-UL-UH-525
- C — CREE INC. LED LIGHT FIXTURE MOUNTED ON A 20' POLE W/ A 2' BASE AND 2 HEADS PER POLE. ARE-EDG-4*1B-DA-08-E-UL-UH-525

GRAPHIC SCALE
(IN FEET)
1 inch = 30 ft.

REGISTERED ARCHITECT JAMES S. HAGAN No. 022170 STATE OF NEW YORK

NICE N EASY FOR VALENTINE STORES
1622 WASHINGTON STREET
WATERTOWN, NY

project:

SITE AND LANDSCAPING PLAN

scale: 1" = 30'-0" by: AMB date: 3 JUNE 2014

rev: 5 JUNE 2014, 9 JUNE 2014, 20 AUGUST 2014, 10 OCTOBER 2014, 20 OCTOBER 2014, 2 FEBRUARY 2015, 23 MARCH 2015

J.S. Hagan Architect P.C.
design build
180 intrepid lane syracuse, new york 13205 315-469-4282 fax 315-469-4276

A-1

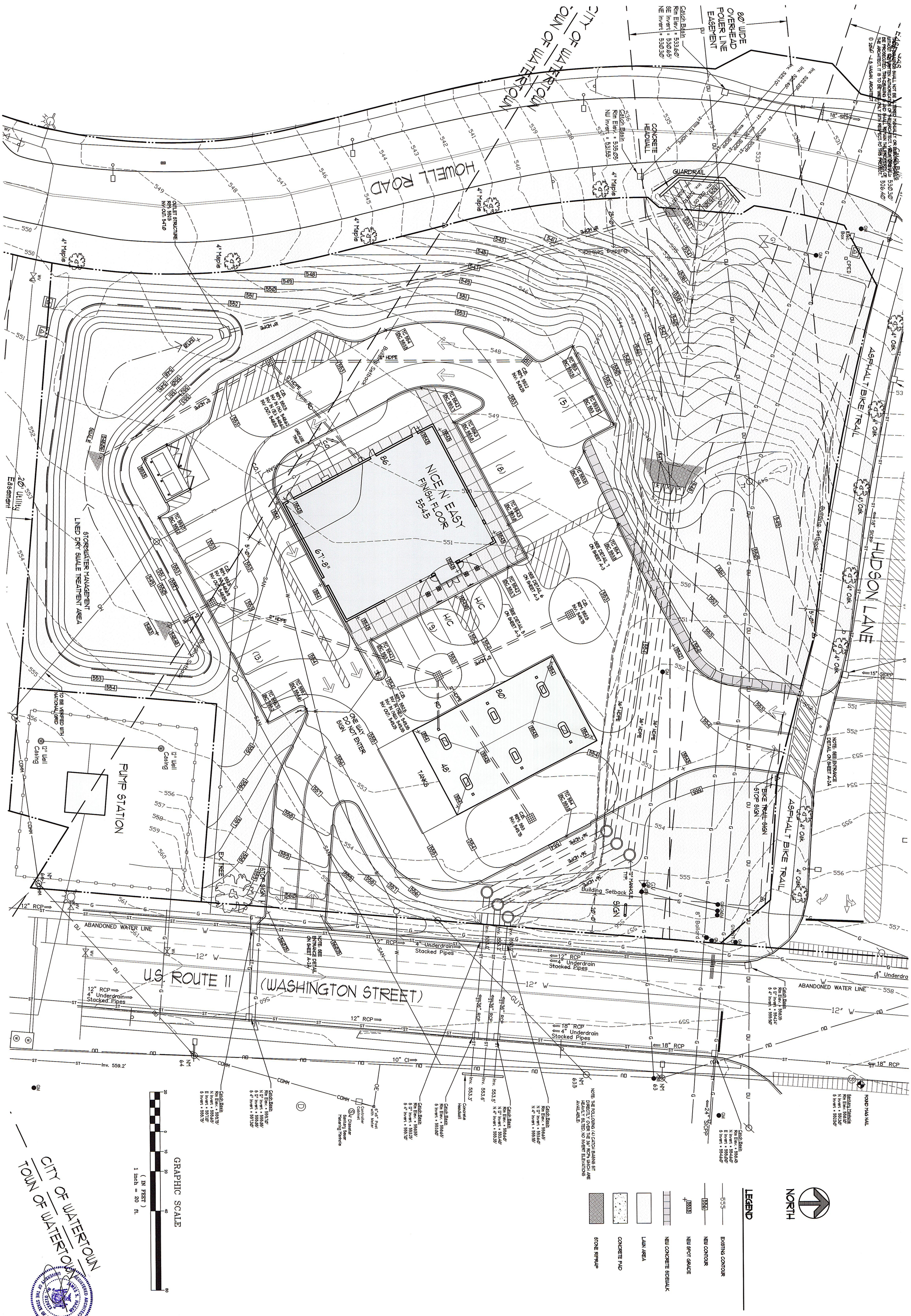

A-2

NICE N EASY FOR VALENTINE STORES

1622 WASHINGTON STREET
WATERTOWN, NY

project:

GRADING PLAN

scale: 1" = 20'-0"

by: AMB

date: 20 AUGUST 2014

rev: 10 OCTOBER 2014
28 JANUARY 2015
2 FEBRUARY 2015
23 MARCH 2015

J.S. Hagan Architect P.C.
design build
180 intrepid lane syracuse, new york 13205 315-469-4282 fax 315-469-4276

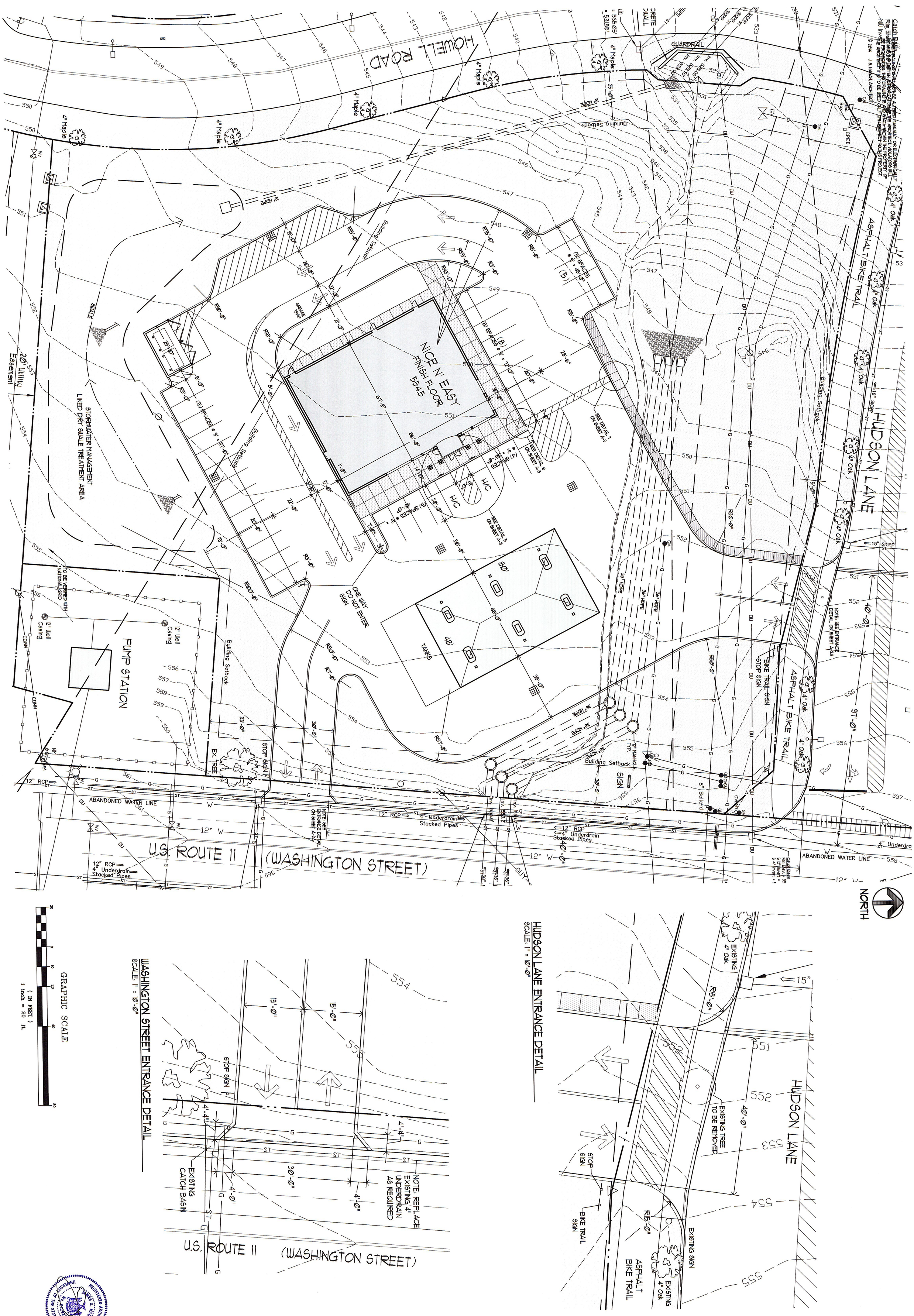

GRAPHIC SCALE

(IN FEET)
1 inch = 20 ft.

WASHINGTON STREET ENTRANCE DETAIL

SCALE: 1" = 10'-0"

HUDSON LANE ENTRANCE DETAIL

SCALE: 1" = 10'-0"

A-2A

NICE N EASY FOR VALENTINE STORES

1622 WASHINGTON STREET
WATERTOWN, NY

project:

DIMENSION & DETAIL PLANS

scale: 1" = 20'-0"

by: AMB

date: 23 MARCH 2015

rev:

J.S. Hagan Architect P.C.
design build
180 intrepid lane syracuse, new york 13205 315-469-4282 fax 315-469-4276

FOR APPROVALS ONLY
NOT FOR CONSTRUCTION

NORTH

HUDSON LANE

HOWELL ROAD

U.S. ROUTE 11 (WASHINGTON STREET)

CITY OF WATERTOWN
TOWN OF WATERTOWN

NICE N' EASY
FINISH FLOOR
554.5

OFFSITE SEDIMENT TRACKING CONTROL (TYP.)

3 – END SECTIONS
INV. = 547.00'

COORDINATE WITH LOCAL UTILITY COMPANY FOR RELOCATION OF EXISTING GAS MARKER.

CHECK DAM (TYP.)

ES3
INV. = 534.00'

SILT FENCE (TYP.)

INSTALL INLET PROTECTION ON PROPOSED CATCH BASINS UNTIL FINAL STABILIZATION IS ACHIEVED (TYP.)

230 LF OF 18" HDPE @ 5.65%

CB4
RIM 552.50'
INV. IN (N) = 548.62'
INV. IN (E) = 548.62'
INV. OUT = 548.52'

RISER
RIM = 552.50'
INV. OUT = 547.00'

LINED DRY SWALE STORM WATER TREATMENT AREA
PROJECT SITE – NYS DEC HOT SPOT CLASSIFICATION

CB4
RIM 552.00'
INV. OUT = 549.25'

64 LF OF 12" HDPE
@ 2.16%

120 LF OF 12" HDPE @ 0.50%

BUILDING
INV. = 550.00'

GREASE TRAP
INV. IN = 548.40'
INV. OUT = 548.15'
(SEE ARCHITECTURAL DRAWINGS.)

BUILDING
INV. = 548.60' (TYP.)

CLEANOUT
INV. = 548.46'

CLEANOUT
INV. = 547.89'

92 LF OF 12" HDPE @ 0.50%

ES2
INV. = 548.06'

CB6
RIM 552.50'
INV. OUT = 549.75'

CB1
RIM 553.00'
INV. OUT = 549.75'

186 LF OF 36" HDPE @ 0.94%

180 LF OF 36" HDPE @ 0.97%

173 LF OF 36" HDPE @ 1.01%

80 LF OF 12" HDPE

80 LF OF 12" HDPE @ 0.50%

STMH5
RIM 555.75'
INV. IN = 550.45'
INV. OUT = 548.75'

STMH4
RIM 555.75'
INV. IN = 550.45'
INV. OUT = 548.75'

64 LF OF 36" HDPE @ 3.95%

80 LF OF 36" HDPE @ 4.17%

64 LF OF 36" HDPE @ 3.97%

80'

48'

TANKS

CB2
RIM 552.50'
INV. IN (NE) = 549.35'
INV. IN (NW) = 549.35'
INV. OUT = 549.25'

1" CORPORATION STOP CONNECTION
CURB STOP

1" ø COPPER WATER SERVICE

WYE/CLEANOUT
INV. = 547.51'

112 LF OF 12" HDPE
@ 0.50%

PUMPING STATION
RIM = 554.50'
INV. IN = 546.83'
INV. OUT = 547.77'

CB3
RIM 552.50'
INV. IN (NE) = 548.69'
INV. OUT = 548.59'

22 LF OF 12" HDPE @ 0.50%

ES1
INV. = 548.48'

RIP-RAP OUTFALL (TYP.)

GRAVITY SANITARY SEWER LATERAL SHALL BE 6" SDR-35 @ MIN. 1.0%, UNLESS NOTED OTHERWISE BY INDICATED INVERTS.

PROPOSED GRADING BY OTHERS. SEE ATTACHED GRADING PLAN FOR SPOT ELEVATIONS AND DETAILED GRADING.

Sanitary Manhole
Rim Elev. 558.10'
N Invert = 551.30'
S Invert = 552.50'

STMH6
RIM 555.75'
INV. IN = 550.55'
INV. OUT = 548.75'

DRAINAGE EASEMENT – EXCLUDING MANHOLES.

72" INTERIOR DIAMETER STORM MANHOLE (TYP. FOR CONVEYANCE OF OFFSITE WATER)

STMH1
RIM 558.10'
INV. IN = 553.20'
INV. OUT = 553.10'

STMH2
RIM 558.10'
INV. IN = 553.18'
INV. OUT = 553.08'

Sanitary Manhole
Rim Elev. 559.55'
N Invert = 552.85'
S Invert = 553.15'

REMOVE EXISTING CONCRETE HEADWALL AND EXTEND 36" PIPES WITH NEW 36" HDPE PIPING TO STMH'S 2 AND 3.

STMH3
RIM 558.10'
INV. IN = 552.90'
INV. OUT = 552.80'

INSTALL CLEANOUT AND BLIND CONNECTION INV. = 553.81' MATCH TOPS OF EXISTING 12" MAIN.

4' Diameter Sanitary Sewer Metering Manhole Locked

Sanitary Manhole
Rim Elev. 561.00'
N Invert = 553.55'
S Invert = 554.30'

CLEANOUT AND 20 LF OF 6" SDR-35 @ 1.00%

TRANSITION COUPLING TO GRAVITY FLOW
INV. = 554.01'

SAWCUT (TYP.)

CONTRACTOR TO REPLACE ASPHALT, CONCRETE ROAD, SUBBASE, AND CONCRETE CURB TO PRECONSTRUCTION CONDITIONS. (TYP.)

1 1/4" SDR-21 PVC FORCEMAIN

CONTROL PANEL MOUNTED ON 8' LONG PRESSURE TREATED 4" x 4" POST – EQUAL PARTS ABOVE AND BELOW GRADE.

Sanitary Manhole
Rim Elev. 560.80'
E Invert = 556.20'
S Invert = 556.30'

Sanitary Manhole
Rim Elev. 561.45'
N Invert = 555.90'
E Invert = 556.85'
S Invert = 557.10'
W Invert = 556.05'

REVISION	DESCRIPTION	DATE
1	CITY OF WATERTOWN COMMENTS	3/24/2015

GRAPHIC SCALE

30 0 15 30 60 120

(IN FEET)
1 inch = 30 ft.

ARCHITECTURE
ENGINEERING
LAND SURVEYING
GYMO PC
228 Sterling Street
Watertown, NY 13601
tel: (315) 788-3900
fax: (315) 788-0668
www.gymopc.com

COPYRIGHT © 2014
GYMO
ARCHITECTURE, ENGINEERING & LAND SURVEYING, P.C.

IT IS A VIOLATION OF SECTION 7209, SUBDIVISION 2 OF THE NEW YORK STATE EDUCATION LAW FOR ANY PERSON UNLESS ACTING UNDER THE DIRECTION OF A LICENSED PROFESSIONAL ENGINEER OR LAND SURVEYOR TO ALTER THIS DOCUMENT IN ANY WAY. IF ALTERED, SUCH LICENSEE SHALL AFFIX HIS OR HER SEAL AND THE NOTATION "ALTERED BY" FOLLOWED BY HIS OR HER SIGNATURE, DATE AND A SPECIFIC DESCRIPTION OF ALTERATION.

UTILITY AND ESC PLAN

VALENTINE STORES, INC.
WASHINGTON STREET, CITY/TOWN OF WATERTOWN
JEFFERSON COUNTY, NEW YORK

Project No:	2014-033E
Scale:	As Noted
Date:	10-14-2014
Drawn By:	THR
Designed By:	THR/PJS
Checked By:	
Date Issued:	10-16-2014
Drwg. No.	

C101

THESE DRAWINGS SHALL NOT BE ALTERED MANUALLY OR ELECTRONICALLY WITHOUT THE WRITTEN AUTHORIZATION OF THE ARCHITECT. VIOLATORS WILL BE PROSECUTED. THIS DRAWING IS AND SHALL REMAIN THE PROPERTY OF THE ARCHITECT. IT IS TO BE USED ONLY WITH RESPECT TO THIS PROJECT.

© 2014 J. S. HAGAN, ARCHITECT

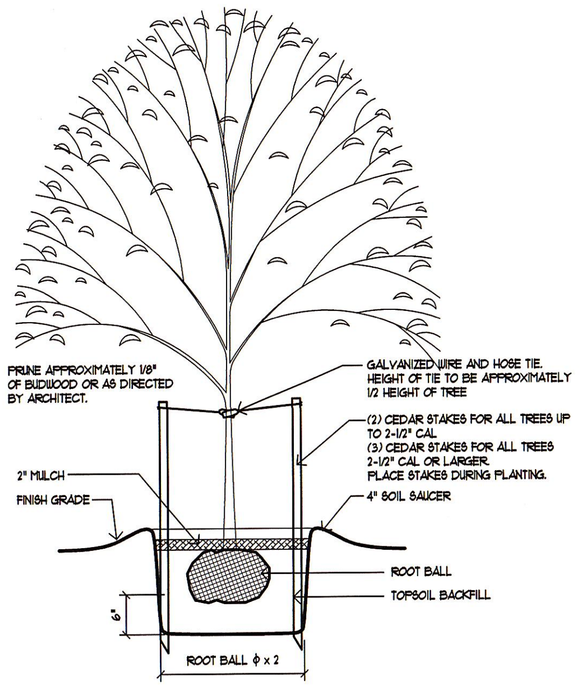

TREE PLANTING DETAIL (9)

NO SCALE

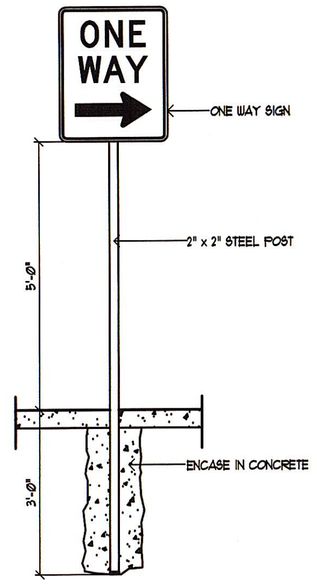

ONE WAY SIGN DETAIL (8)

SCALE: 1/2" = 1'-0"

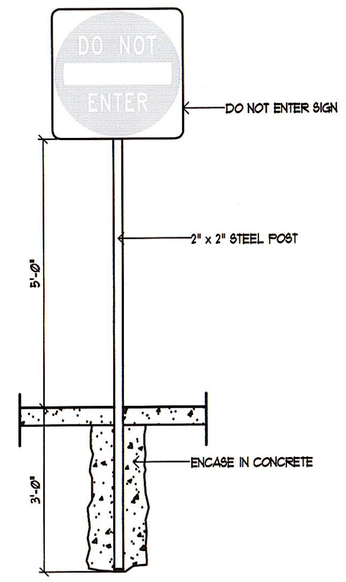

DO NOT ENTER SIGN DETAIL (8)

SCALE: 1/2" = 1'-0"

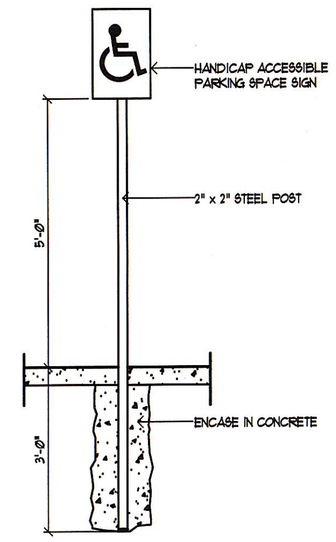

HANDICAP SIGN DETAIL (8)

SCALE: 1/2" = 1'-0"

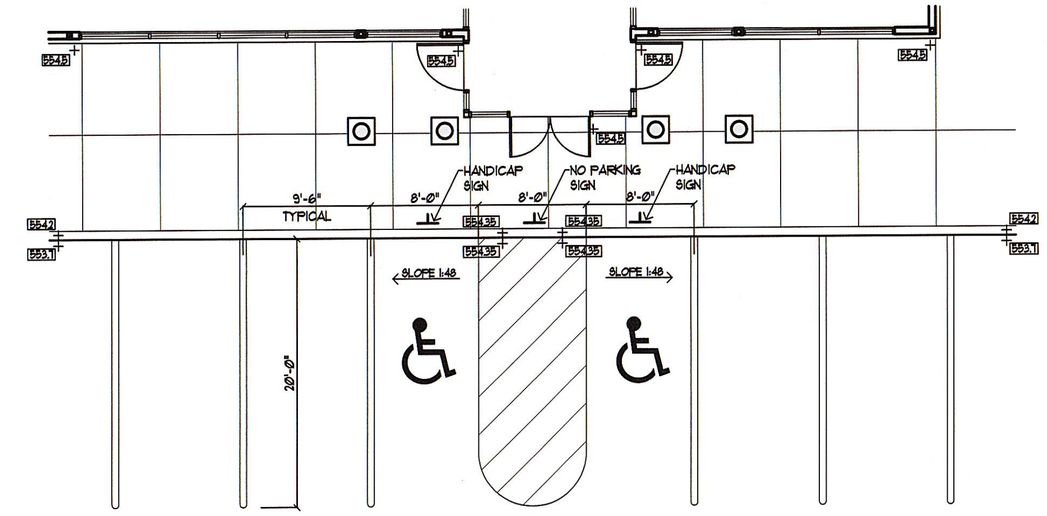

STRIPING & H/C PAVEMENT RAMPING DETAIL (5)

SCALE: 1/8" = 1'-0"

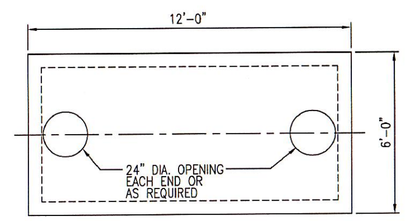

HEAVIEST PICK WEIGHT: 16,125 POUNDS

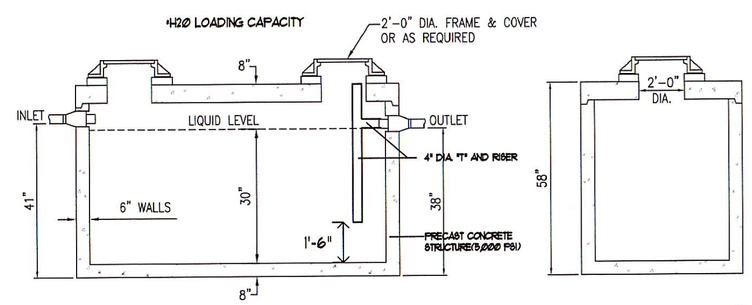

GREASE TRAP DETAIL (1000 GAL) (22)

SCALE: 1/4" = 1'-0"

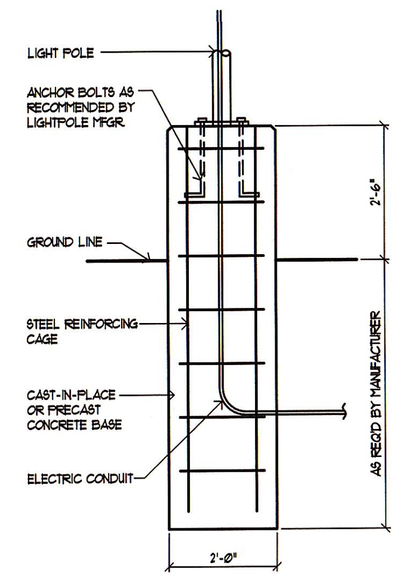

LIGHT POLE BASE DETAIL (1)

SCALE: 1/2" = 1'-0"

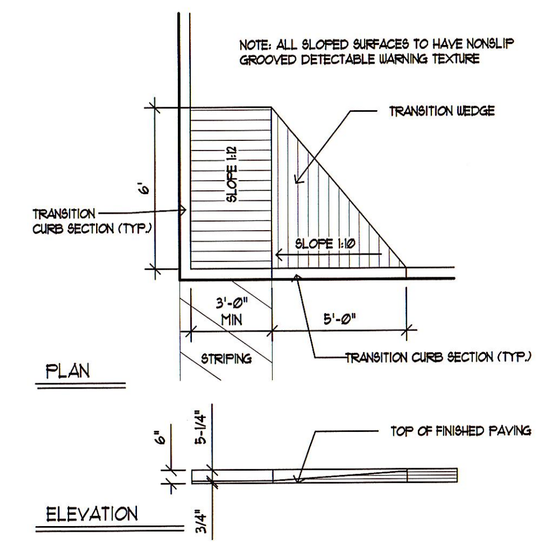

CURB DROP FOR WHEELCHAIR ACCESS (6)

SCALE: 1/4" = 1'-0"

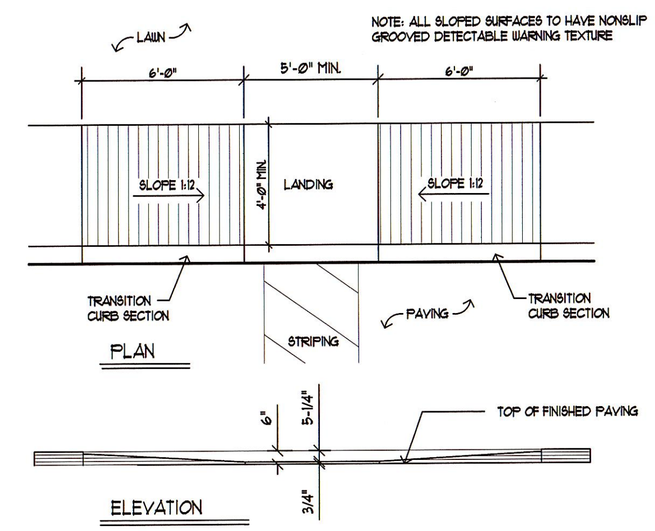

CURB DROP FOR WHEELCHAIR ACCESS (7)

SCALE: 1/4" = 1'-0"

NOTE:
CITY SIDEWALKS THICKNESSES (ALL 5000 PSI MIX)
4' WIDE SIDEWALK - 4" CONCRETE SLAB
5' WIDE SIDEWALK - 5" CONCRETE SLAB
6' WIDE SIDEWALK - 6" CONCRETE SLAB
SIDEWALK ACROSS DRIVEWAYS- 6" CONCRETE SLAB

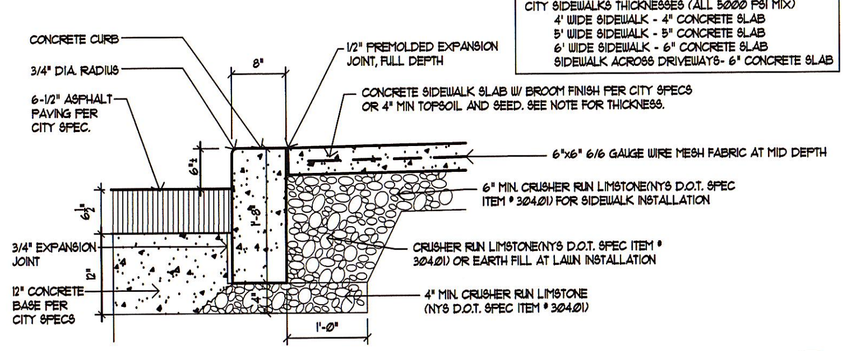

CITY R.O.W. CONCRETE CURB/SIDEWALK/PAVEMENT DETAIL (4)

SCALE: 3/4" = 1'-0"

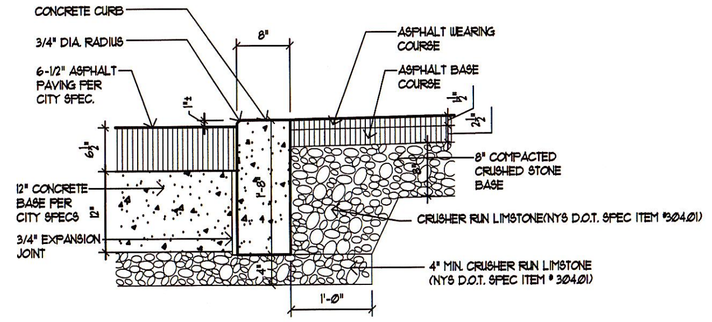

DROP CURB DETAIL (21B)

SCALE: 3/4" = 1'-0"

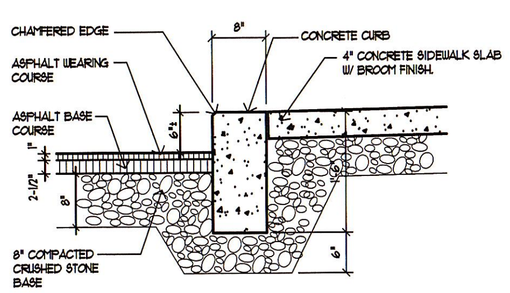

ON-SITE ASPHALT PAVING & CONCRETE SIDEWALK DETAIL (2)

SCALE: 3/4" = 1'-0"

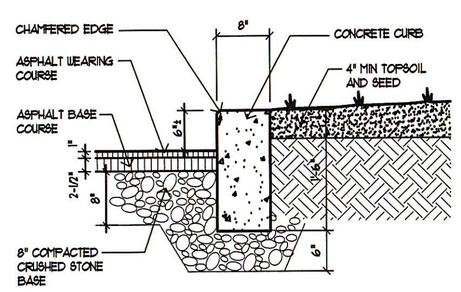

ON-SITE CONCRETE CURB & LAWN AREA DETAIL (3)

SCALE: 3/4" = 1'-0"

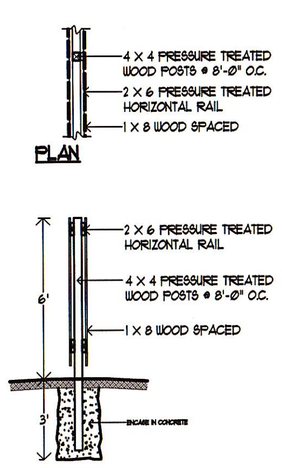

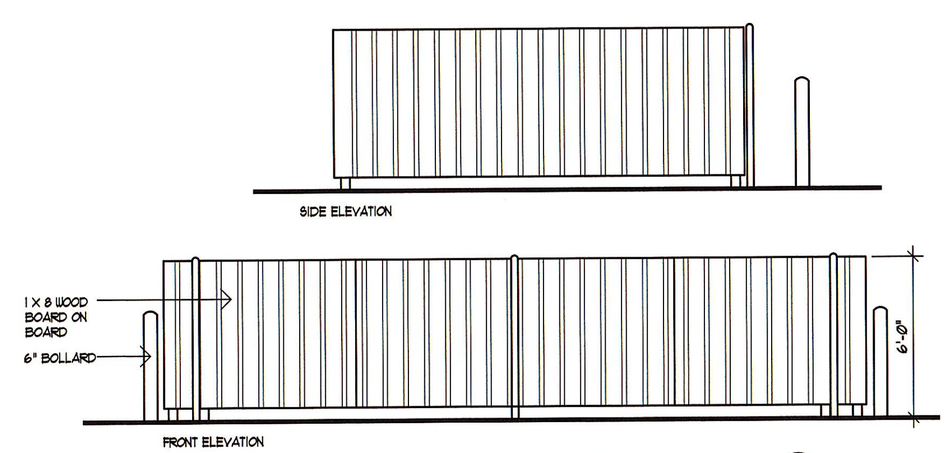

DUMPSTER ENCLOSURE ELEVATIONS (10)

SCALE: 1/4" = 1'-0"

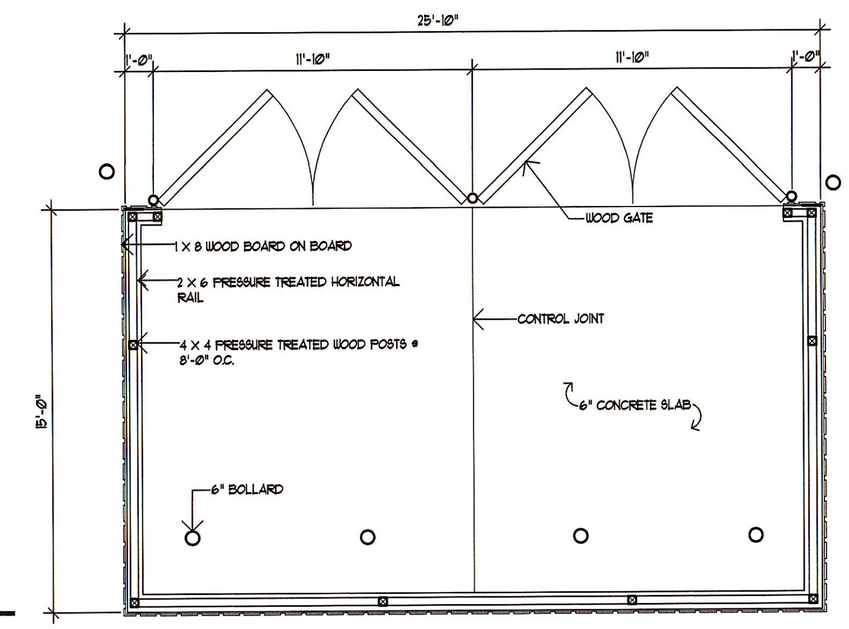

DUMPSTER ENCLOSURE PLAN (11)

SCALE: 1/4" = 1'-0"

NICE N EASY FOR VALENTINE STORES

1622 WASHINGTON STREET
WATERTOWN, NY

SITE DETAILS

scale: AS NOTED by: AMB project: date: 10 OCTOBER 2014 rev: 23 MARCH 2015 20 OCTOBER 2014

REGISTERED ARCHITECT JAMES S. HAGAN No. 012923 UNIVERSITY OF THE STATE OF NEW YORK

J.S. Hagan Architect, P.C.
design build
180 intrepid lane syracuse, new york 13205 315-469-4282 fax 315-469-4276

A-3

FOR APPROVALS ONLY
NOT FOR CONSTRUCTION

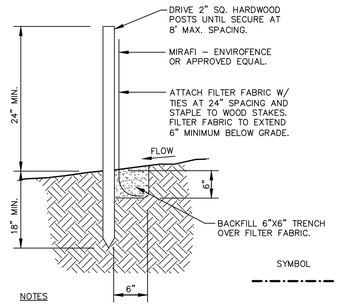

NOTES

1. SILTATION FENCE TO REMAIN IN PLACE UNTIL LAWNS HAVE BEEN ESTABLISHED AND/OR FINISH SURFACES HAVE BEEN INSTALLED.
2. SILTATION FENCE TO BE CHECKED AND MAINTAINED THROUGHOUT CONSTRUCTION. SILT ACCUMULATIONS SHALL BE REMOVED PERIODICALLY AS REQUIRED.
3. SECTIONS OF FILTER FABRIC TO HAVE 12" OVERLAP AT WOOD STAKES AND STAPLED IN PLACE.

1	TYPICAL SILTATION FENCE DETAIL
C501	NOT TO SCALE D120-01

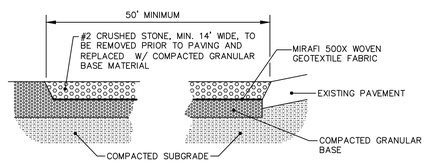

2	TYPICAL OFFSITE SEDIMENT TRACKING CONTROL
C501	NOT TO SCALE D163-01

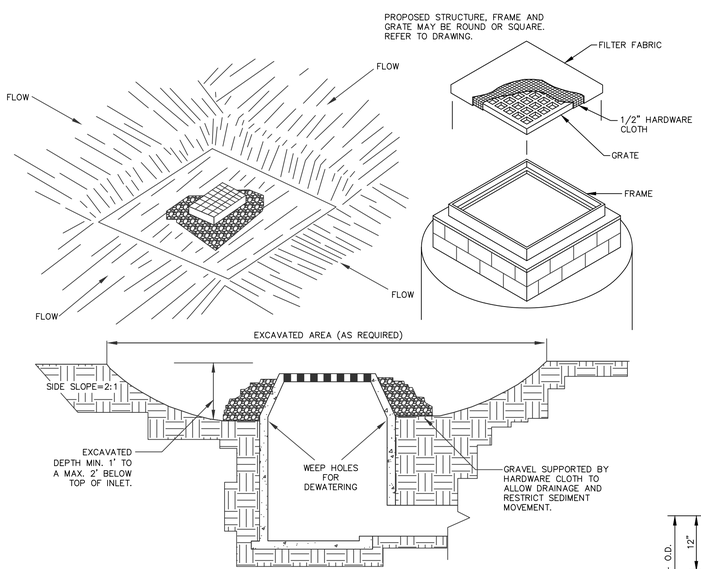

CONSTRUCTION SPECIFICATIONS:

1. CLEAR THE AREA OF ALL DEBRIS THAT WILL HINDER EXCAVATION.
2. GRADE APPROACH TO THE INLET UNIFORMLY AROUND THE BASIN.
3. WEEP HOLES SHALL BE PROTECTED BY GRAVEL.
4. UPON STABILIZATION OF CONTRIBUTING DRAINAGE AREA, SEAL WEEP HOLES, FILL BASIN WITH STABLE SOIL TO FINAL GRADE, COMPACT IT PROPERLY AND STABILIZE WITH PERMANENT SEEDING.

MAXIMUM DRAINAGE AREA 1 ACRE

3	EXCAVATED DROP INLET PROTECTION
C501	NOT TO SCALE

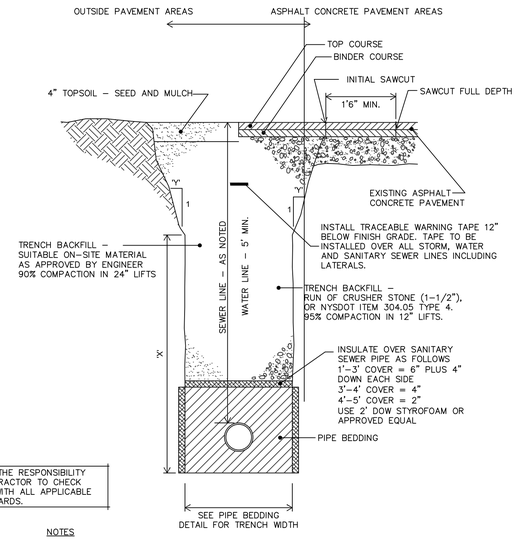

*IT SHALL BE THE RESPONSIBILITY OF THE CONTRACTOR TO CHECK AND COMPLY WITH ALL APPLICABLE SAFETY STANDARDS.

NOTES

1. DIMENSIONS 'X' AND 'Y' SHOWN ABOVE SHALL BE DETERMINED BY CONTRACTOR TO COMPLY WITH O.S.H.A., NEW YORK STATE DEPARTMENT OF LABOR, NEW YORK STATE INDUSTRIAL CODE AND ALL OTHER APPLICABLE SAFETY STANDARDS.
2. SAFETY SHEETING OR TRENCH BOX MAY BE USED IN PLACE OF SLOPED TRENCH WALLS.
3. SHEETING, WHEN REQUIRED, TO BE CUT OFF AT LEAST 5 FEET BELOW STREET AND A MINIMUM OF 1 FOOT ABOVE TOP OF PIPE. WOOD SHEETING DRIVEN BELOW MID–DIAMETER OF THE PIPE SHALL BE LEFT IN PLACE. STEEL SHEETING DRIVEN BELOW MID–DIAMETER MAY BE WITHDRAWN IF APPROVED IN WRITING BY THE ENGINEER. FOR PVC PIPE ALL SHEETING DRIVEN BELOW MID–DIAMETER SHALL BE LEFT IN PLACE.
4. TRENCHES LOCATED ON ROAD SHOULDERS SHALL BE TREATED THE SAME AS UNDER PAVM'T.
5. CONTRACTOR MAY USE NATIVE MATERIAL AS BACKFILL IF APPROVED BY ENGINEER.

4	TYPICAL UTILTY LINE TRENCH DETAIL AND PAYMENT LIMITS
C501	NOT TO SCALE D101–02

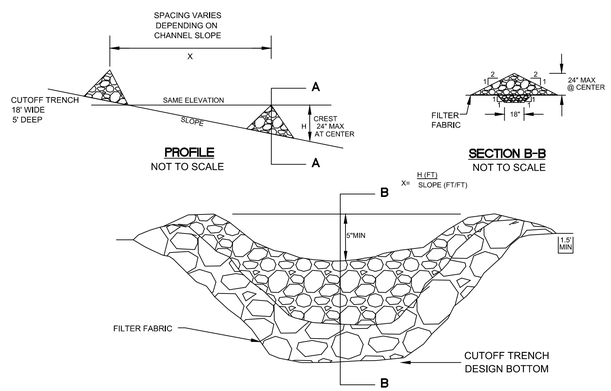

5	TYPICAL CHECK DAM DETAIL
C501	NOT TO SCALE D117–01

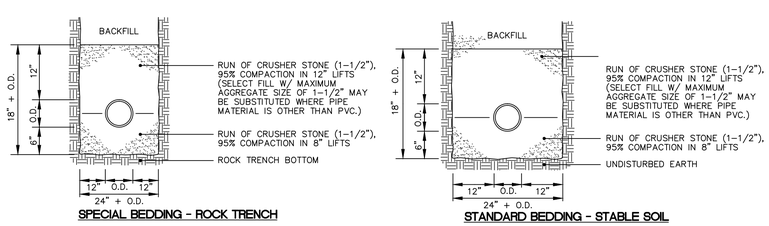

6	TYPICAL PIPE BEDDING DETAILS AND PAYMENT LIMITS
C501	NOT TO SCALE U102-01

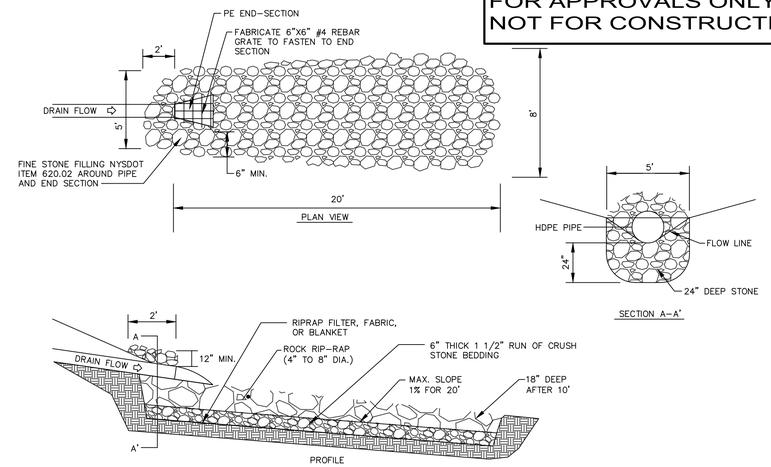

NOTES:

1. STONE FOR RIPRAP SHALL CONSIST OF FIELD STONE OR ROUGH UNHEWN QUARRY STONE. THE STONE SHALL BE HARD AND ANGULAR AND OF A QUALITY THAT WILL NOT DISINTEGRATE ON EXPOSURE TO WATER OR WEATHERING. THE SPECIFIC GRAVITY OF THE INDIVIDUAL STONES SHALL BE AT LEAST 2.5.
2. RIPRAP SHALL HAVE A FILTER PLACED UNDER IT IN ALL CASES TO PREVENT SOIL MOVEMENT INTO AND THROUGH THE RIPRAP.

   THE FILTER MAY CONSIST OF A GRAVEL LAYER OR A PLASTIC FILTER CLOTH. THE PLASTIC FILTER CLOTH MAY BE WOVEN OR NON–WOVEN MONOFILAMENT YARNS, AND SHALL MEET THE FOLLOWING BASE REQUIREMENTS: THICKNESS 20–60 MILS, GRAB STRENGTH 90–120 LBS; AND SHALL CONFORM TO ASTM D–1682.

   GRAVEL FILTER BLANKET, WHEN USED, SHALL BE DESIGNED BY COMPARING PARTICLE SIZES OF THE OVERLYING MATERIAL AND THE BASE MATERIAL. DESIGN CRITERIA IS AVAILABLE IN THE STANDARD AND SPECIFICATION FOR RIPRAP SLOPE PROTECTION ON PAGE 7B.57 OF THE NEW YORK STANDARDS AND SPECIFICATIONS FOR EROSION AND SEDIMENT CONTROL.
3. UPON RIPRAP SLOPE INSTALLATION, LINING SHOULD BE MAINTAINED AS BUILT TO PREVENT UNDERMINING AND DETERIORATION. WATERWAYS SHOULD BE INSPECTED AFTER HIGH FLOWS FOR EVIDENCE OF SCOUR BENEATH THE RIPRAP OR FOR DISLODGED STONES. REPAIRS SHOULD BE MADE IMMEDIATELY.

7	TYPICAL STORM OUTFALL DETAIL
C501	NOT TO SCALE D114-02

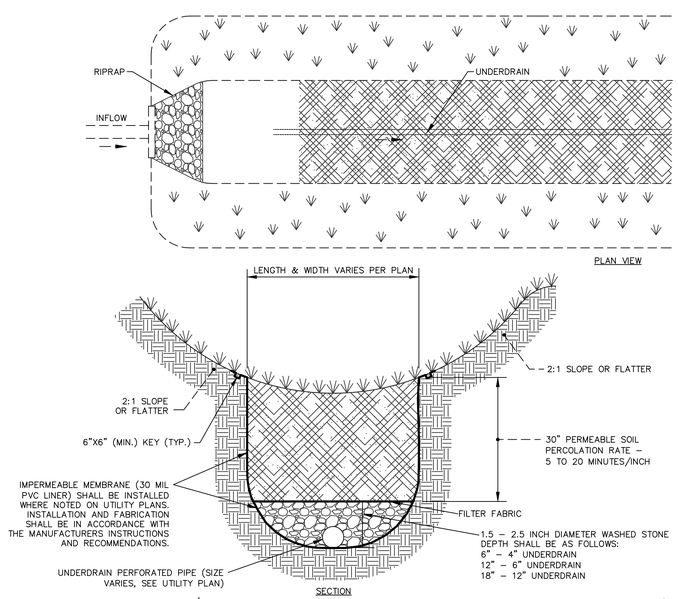

1	DRY SWALE DETAIL
C501	NOT TO SCALE

REVISION	DESCRIPTION	DATE
1	CITY OF WATERTOWN COMMENTS	3/24/2015

ARCHITECTURE ENGINEERING LAND SURVEYING
GYMO PC
228 Sterling Street
Watertown, NY 13601
tel: (315) 788-3900
fax: (315) 788-0668
www.gymopc.com

COPYRIGHT © 2014
GYMO
ARCHITECTURE, ENGINEERING & LAND SURVEYING, P.C.

IT IS A VIOLATION OF SECTION 7209, SUBDIVISION 2, OF THE NEW YORK STATE EDUCATION LAW FOR ANY PERSON, UNLESS ACTING UNDER THE DIRECTION OF A LICENSED PROFESSIONAL ENGINEER OR LAND SURVEYOR TO ALTER THIS DOCUMENT IN ANY WAY. IF ALTERED, SUCH LICENSEE SHALL AFFIX HIS OR HER SEAL AND THE NOTATION "ALTERED BY" FOLLOWED BY HIS OR HER SIGNATURE, DATE AND A SPECIFIC DESCRIPTION OF ALTERATION.

SITE DETAILS

VALENTINE STORES, INC.
WASHINGTON STREET, CITY/TOWN OF WATERTOWN
JEFFERSON COUNTY, NEW YORK

Project No:	2014-033E
Scale:	As Noted
Date:	10-14-2014
Drawn By:	THR/MJB
Designed By:	THR/PJS
Checked By:	
Date Issued:	10-16-2014
Drwg. No.	C501

FOR APPROVALS ONLY
NOT FOR CONSTRUCTION

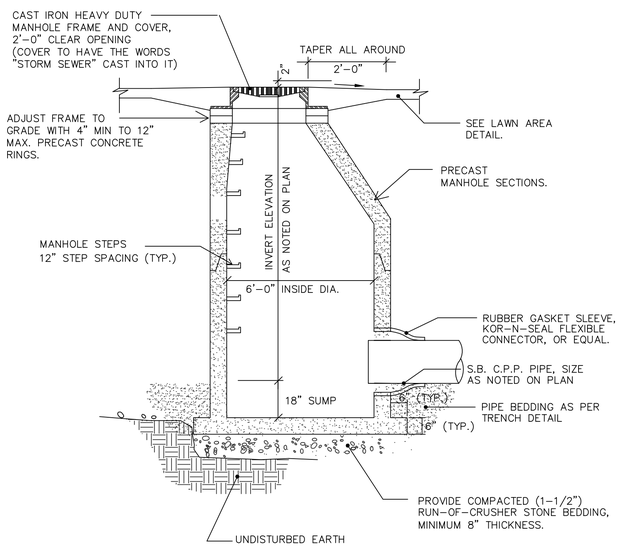

NOTES:

1. ALL MANHOLE SECTIONS TO BE HS-20 LOAD RATING MINIMUM.

1	STORM MANHOLE DETAIL (STMH)	
C502	NOT TO SCALE	D101-01

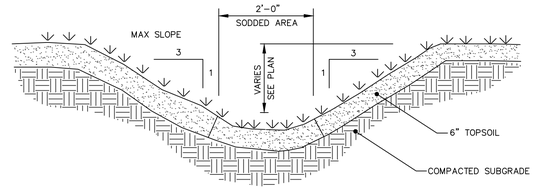

CROSS SECTION BLOWUP
NOT TO SCALE

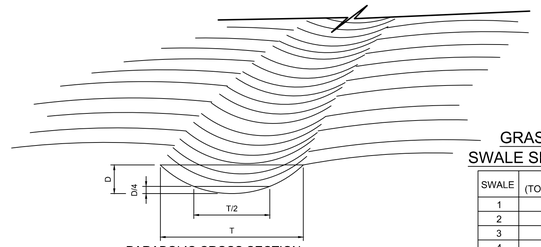

PARABOLIC CROSS SECTION
NOT TO SCALE

GRASSED LINED SWALE SPECIFICATIONS

SWALE	T (TOP WIDTH)	D (DEPTH)
1	6.1'	1.0'
2	1.0'	1.0'
3	15.7'	0.8'
4	1.2'	1.1'
5	1.0'	1.2'
6	1.2'	1.3'

*THESE ARE THE MINIMUM DIMENSIONS OF THE GRASS LINED SWALES.

CONSTRUCTION SPECIFICATIONS

1. ALL TREES, BRUSH, STUMPS, OBSTRUCTIONS AND OTHER OBJECTIONABLE MATERIAL SHALL BE REMOVED AND DISPOSED OF SO AS NOT TO INTERFERE WITH THE PROPER FUNCTIONING OF THE WATERWAY.
2. THE WATERWAY SHALL BE EXCAVATED OR SHAPED TO LINE, GRADE AND CROSS SECTION AS REQUIRED TO MEET THE CRITERIA SPECIFIED HEREIN, AND BE FREE OF BANK PROJECTIONS OR OTHER IRREGULARITIES WHICH WILL IMPEDE NORMAL FLOW.
3. FILLS SHALL BE COMPACTED AS NEEDED TO PREVENT UNEQUAL SETTLEMENT THAT WOULD CAUSE DAMAGE IN THE COMPLETE WATERWAY.
4. ALL EARTH REMOVED AND NOT NEEDED IN CONSTRUCTION SHALL BE SPREAD OR DISPOSED OF SO THAT IT WILL NOT INTERFERE WITH THE FUNCTIONING OF THE WATERWAY.
5. STABILIZATION SHALL BE DONE ACCORDING TO THE APPROPRIATE STANDARD AND SPECIFICATIONS FOR VEGETATIVE PRACTICES:
6. SEEDING AND MULCHING MAY BE USED FOR THE ESTABLISHMENT OF THE VEGETATION. IT IS RECOMMENDED THAT, WHEN CONDITIONS PERMIT, TEMPORARY WATERWAYS OR OTHER MEANS SHOULD BE USED TO PREVENT WATER FROM ENTERING THE WATERWAY DURING THE ESTABLISHMENT OF THE VEGETATION.

3	GRASSED WATERWAY
C502	NOT TO SCALE

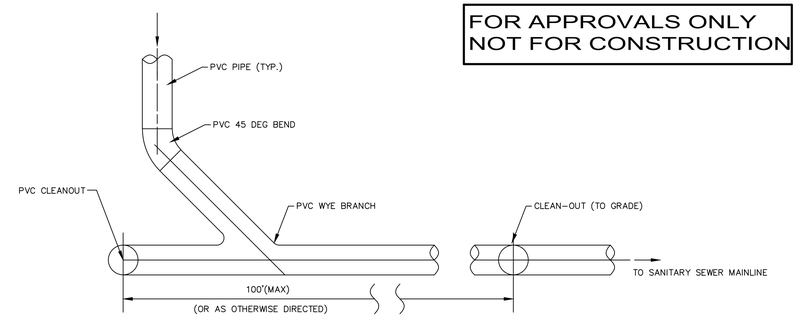

PLAN

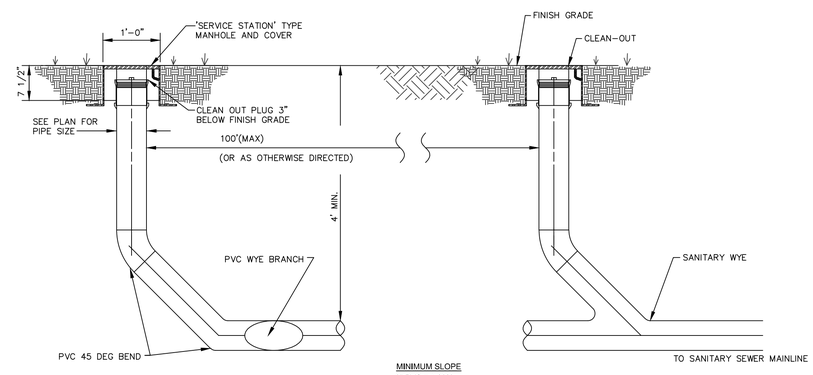

MINIMUM SLOPE
6" PVC = 1.00%
4" PVC =2.00%

4	TYPICAL SEWER LATERAL DETAIL
C502	NOT TO SCALE D163-01

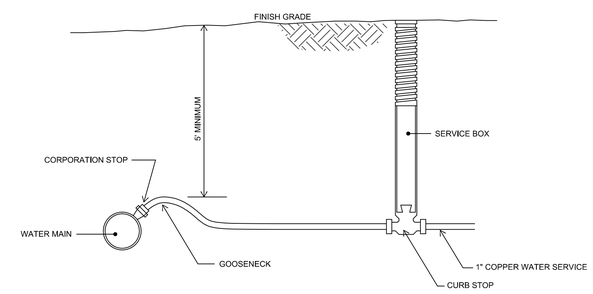

5	TYPICAL SERVICE CONNECTION TO WATER MAIN DETAIL
C502	NOT TO SCALE W102-01

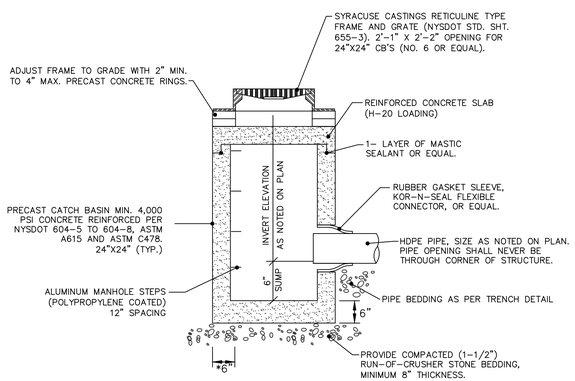

*IF CORNER HAS PIPE ENTRIES ON BOTH SIDES, AND THERE IS LESS THAN 2" BETWEEN EITHER OPENING AND THE CORNER, THEN THAT SECTION OF THE DRAINAGE STRUCTURE MUST HAVE 8" THICK WALLS.

2	TYPICAL PRECAST CATCH BASIN DETAIL
C502	NOT TO SCALE D102-03

REVISION	DESCRIPTION	DATE
1	CITY OF WATERTOWN COMMENTS	3/24/2015

ARCHITECTURE ENGINEERING LAND SURVEYING
GYMO PC
228 Sterling Street
Watertown, NY 13601
tel: (315) 788-3900
fax: (315) 788-0668
www.gymopc.com

COPYRIGHT © 2014
GYMO
ARCHITECTURE, ENGINEERING & LAND SURVEYING, P.C.
IT IS A VIOLATION OF SECTION 7209, SUBDIVISION 2, OF NEW YORK STATE EDUCATION LAW FOR ANY PERSON, UNLESS ACTING UNDER THE DIRECTION OF A LICENSED PROFESSIONAL ENGINEER OR LAND SURVEYOR TO ALTER THIS DOCUMENT IN ANY WAY. IF ALTERED, SUCH LICENSEE SHALL AFFIX HIS OR HER SEAL AND THE NOTATION "ALTERED BY" FOLLOWED BY HIS OR HER SIGNATURE, DATE AND A SPECIFIC DESCRIPTION OF ALTERATION.

SITE DETAILS

VALENTINE STORES, INC.
WASHINGTON STREET, CITY/TOWN OF WATERTOWN
JEFFERSON COUNTY, NEW YORK

Project No:	2014-033E
Scale:	As Noted
Date:	10-14-2014
Drawn By:	THR/MJB
Designed By:	THR/PJS
Checked By:	
Date Issued:	10-16-2014
Drwg. No.	

C502

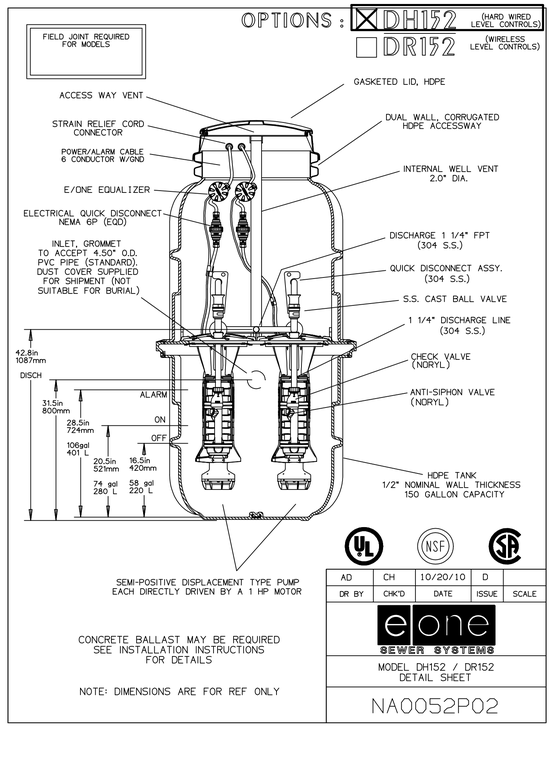

AD	CH	10/20/10	D	
DR BY	CHK'D	DATE	ISSUE	SCALE

e/one SEWER SYSTEMS

MODEL DH152 / DR152 DETAIL SHEET

NA0052P02

1	PUMPING STATION DETAIL
C503	NOT TO SCALE

PUMPING STATION SCHEDULE

GRAVITY INV.	546.83
FORCEMAIN INV. OUT	547.77
HIGH LEVEL ALARM EL.	546.58
PUMP ON EL.	545.91
PUMP OFF EL.	545.58
BOTTOM EL.	544.20
RIM EL.	554.50

2	PUMPING STATION SCHEDULE
C503	NOT TO SCALE

DUPLEX ALTERNATING PANEL T-260

EXTERNAL VISUAL & AUDIBLE ALARM
EXTERNAL LATCHING MANUAL SILENCE
MANUAL RUN
PUMP RUN INDICATORS
CONFORMAL COATED CIRCUIT BOARD
PADLOCK
ALARM DRY CONTACT
NEMA 4X ENCLOSURE ASSEMBLY

CORROSION PROOF THERMOPLASTIC POLYESTER APPROVED BY UL FOR ELECTRICAL CONTROL ENCLOSURE

OPTIONS:
☐ HOUR METER

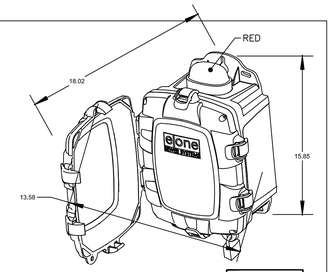

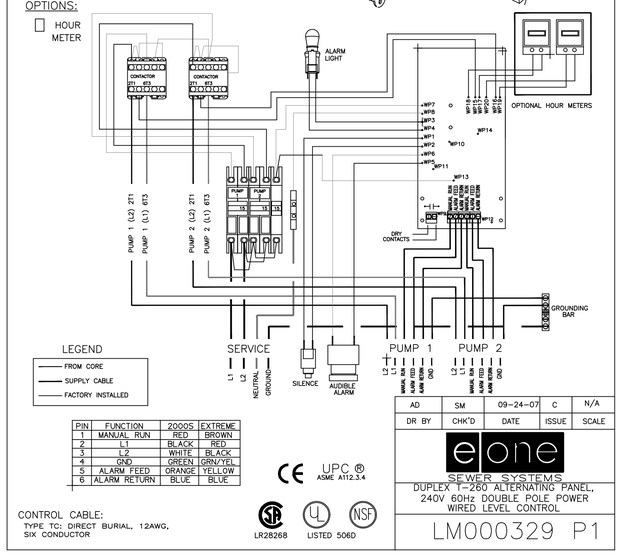

PIN	FUNCTION	2000S	EXTREME
1	MANUAL RUN	RED	BROWN
2	L1	BLACK	RED
3	L2	WHITE	BLACK
4	GND	GREEN	GRN/YEL
5	ALARM FEED	ORANGE	YELLOW
6	ALARM RETURN	BLUE	BLUE

CONTROL CABLE:
TYPE TC: DIRECT BURIAL, 12AWG, SIX CONDUCTOR

CE UPC® ASME A112.3.4
LR28268 LISTED 506D

AD	SM	09-24-07	C	N/A
DR BY	CHK'D	DATE	ISSUE	SCALE

e/one SEWER SYSTEMS

DUPLEX T-260 ALTERNATING PANEL, 240V 60Hz DOUBLE POLE POWER WIRED LEVEL CONTROL

LM000329 P1

3	PUMPING STATION CONTROL PANEL DETAIL
C503	NOT TO SCALE

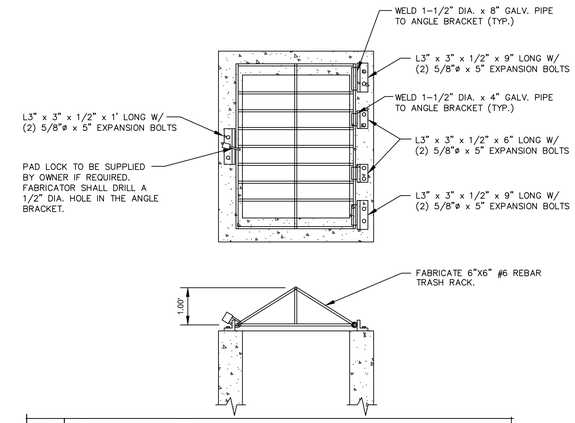

4	TRASH RACK DETAIL
C503	NOT TO SCALE D138-01

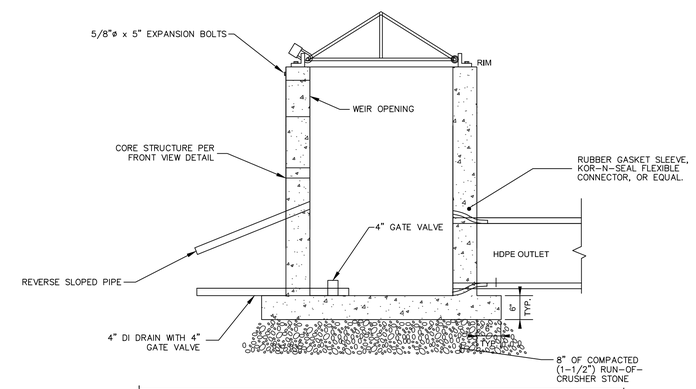

5	RISER SIDE VIEW
C503	NOT TO SCALE D137-01

REVISION	DESCRIPTION	DATE
1	CITY OF WATERTOWN COMMENTS	3/24/2015

FOR APPROVALS ONLY
NOT FOR CONSTRUCTION

GYMO PC
ARCHITECTURE ENGINEERING LAND SURVEYING
228 Sterling Street
Watertown, NY 13601
tel: (315) 788-3900
fax: (315) 788-0668
www.gymopc.com

COPYRIGHT © 2014
GYMO
ARCHITECTURE, ENGINEERING & LAND SURVEYING, P.C.
IT IS A VIOLATION OF SECTION 7209, SUBDIVISION 2, OF THE NEW YORK STATE EDUCATION LAW FOR ANY PERSON, UNLESS ACTING UNDER THE DIRECTION OF A LICENSED PROFESSIONAL ENGINEER OR LAND SURVEYOR TO ALTER THIS DOCUMENT IN ANY WAY. IF ALTERED, SUCH LICENSEE SHALL AFFIX HIS OR HER SEAL AND THE NOTATION "ALTERED BY" FOLLOWED BY HIS OR HER SIGNATURE, DATE AND A SPECIFIC DESCRIPTION OF ALTERATION.

SITE DETAILS

VALENTINE STORES, INC.
WASHINGTON STREET, CITY/TOWN OF WATERTOWN
JEFFERSON COUNTY, NEW YORK

Project No:	2014-033E
Scale:	As Noted
Date:	10-14-2014
Drawn By:	THR/MJB
Designed By:	THR/PJS
Checked By:	
Date Issued:	10-16-2014
Drwg. No.	

C503

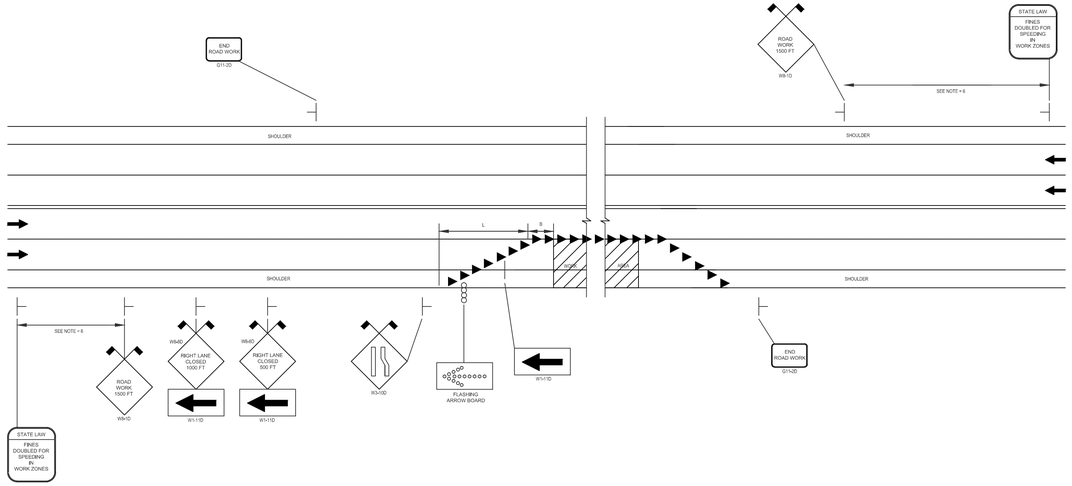

NOTES:

1. LEGEND: ▲ DELINIATION DEVICE, FLASHING ARROW BOARD
2. "L" APPROX. = TRANSITION LENGTH SEE TABLE I, STANDARD TAPER LENGTHS
3. "B" APPROX. = BUFFER ZONE SEE TABLE I, STANDARD TAPER LENGTHS
4. THE MAXIMUM SPACING BETWEEN DELINEATION DEVICES SHALL BE EQUIVALENT TO THE NUMERICAL VALUE OF THE SPEED LIMIT OR 40 L.F. (12M) MAX.
5. "L" DISTANCE SHOULD BE PROVIDED WHERE NO INTERFERENCE OCCURS WITH SIDEROADS OR INTERCHANGES, IF AN INTERSECTION FALLS WITHIN THE "L" DISTANCE THEN THE FULL TAPER SHALL BE COMPLETED BEFORE THE INTERSECTION.
6. INSTALL SIGN 1000 FT (304M) UPSTREAM OF THE FIRST WARNING SIGN ON HIGHWAYS WITH THE 85th PERCENTILE SPEEDS EQUAL TO OR GREATER THAN 45 MPH AND 300-500 FT (91M-152M) UPSTREAM FOR SPEEDS UNDER 45 MPH.

1	TRAFFIC CONTROL FOR WORK AREA ON 4 OR 5 - LANE, 2 - WAY ROADWAY (RIGHT LANE CLOSURE)
C507	NOT TO SCALE

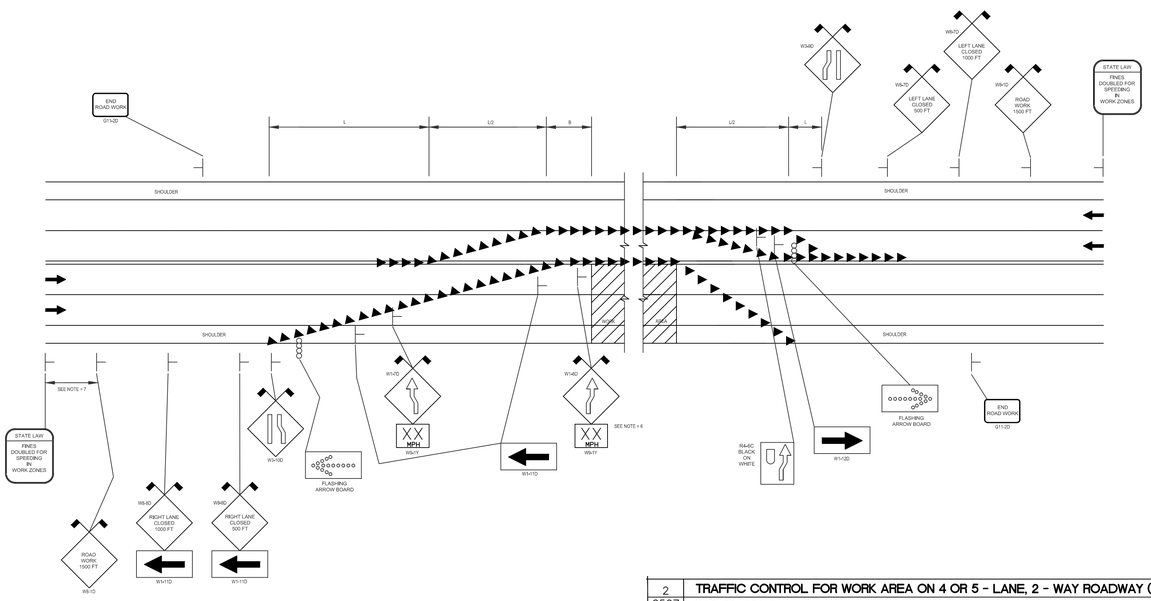

NOTES:

1. LEGEND: ▲ DELINIATION DEVICE, FLASHING ARROW BOARD
2. "L" APPROX. = TRANSITION LENGTH SEE TABLE I, STANDARD TAPER LENGTHS
3. "B" APPROX. = BUFFER ZONE SEE TABLE I, STANDARD TAPER LENGTHS
4. THE MAXIMUM SPACING BETWEEN DELINEATION DEVICES SHALL BE EQUIVALENT TO THE NUMERICAL VALUE OF THE SPEED LIMIT OR 40 L.F. (12M) MAX.
5. "L" DISTANCE SHOULD BE PROVIDED WHERE NO INTERFERENCE OCCURS WITH SIDEROADS OR INTERCHANGES, IF AN INTERSECTION FALLS WITHIN THE "L" DISTANCE THEN THE FULL TAPER SHALL BE COMPLETED BEFORE THE INTERSECTION.
6. "XX" SPEED TO BE DETERMINED BY THE REG. TRAFFIC ENGINEER. ADVANCE POSTING DISTANCE SHALL BE PER TABLE IV.
7. INSTALL SIGN 1000 FT (304M) UPSTREAM OF THE FIRST WARNING SIGN ON HIGHWAYS WITH THE 85th PERCENTILE SPEEDS EQUAL TO OR GREATER THAN 45 MPH AND 300-500 FT (91M-152M) UPSTREAM FOR SPEEDS UNDER 45 MPH.

2	TRAFFIC CONTROL FOR WORK AREA ON 4 OR 5 - LANE, 2 - WAY ROADWAY (TWO LANES CLOSED)
C507	NOT TO SCALE

REVISION	DESCRIPTION	DATE
1	CITY OF WATERTOWN COMMENTS	3/24/2015

FOR APPROVALS ONLY
NOT FOR CONSTRUCTION

GYMO PC
ARCHITECTURE
ENGINEERING
LAND SURVEYING
228 Sterling Street
Watertown, NY 13601
tel: (315) 788-3900
fax: (315) 788-0668
www.gymopc.com

COPYRIGHT © 2014
GYMO
ARCHITECTURE, ENGINEERING
& LAND SURVEYING, P.C.

IT IS A VIOLATION OF SECTION 7209, SUBDIVISION 2, OF NEW YORK STATE EDUCATION LAW FOR ANY PERSON, UNLESS ACTING UNDER THE DIRECTION OF A LICENSED PROFESSIONAL ENGINEER OR LAND SURVEYOR TO ALTER THIS DOCUMENT IN ANY WAY. IF ALTERED, SUCH LICENSEE SHALL AFFIX HIS OR HER SEAL AND THE NOTATION "ALTERED BY" FOLLOWED BY HIS OR HER SIGNATURE, DATE AND A SPECIFIC DESCRIPTION OF ALTERATION.

MPT DETAILS

VALENTINE STORES, INC.
WASHINGTON STREET, CITY/TOWN OF WATERTOWN
JEFFERSON COUNTY, NEW YORK

Project No:	2014-033E
Scale:	As Noted
Date:	10-14-2014
Drawn By:	THR/MJB
Designed By:	THR/PJS
Checked By:	
Date Issued:	10-16-2014
Drwg. No.	

C504

THESE DRAWINGS SHALL NOT BE ALTERED MANUALLY OR ELECTRONICALLY WITHOUT THE WRITTEN AUTHORIZATION OF THE ARCHITECT. VIOLATORS WILL BE PROSECUTED. THIS DRAWING IS AND SHALL REMAIN THE PROPERTY OF THE ARCHITECT. IT IS TO BE USED ONLY WITH RESPECT TO THIS PROJECT.
© 2014 J.S. HAGAN, ARCHITECT

EQUIPMENT SCHEDULE

Count	ITEM
1	D05.2 – SOAP/SANITIZER DISPENSER FOR 3-COMP SINK
1	D05.3 – SOAP DISPENSER – WALL MOUNTED
1	D20.13 – RECEIVING SHOULDER
1	D03.6 – REACH-IN COOLER – SINGLE DOOR– DEFIELD
1	D03.1W – RINSING TABLE – 81" – 48" – WOOD BUTCHER BLOCK
1	D27.1 – MONITOR – 23" – SERVICE AREA (STANDARD)
2	D27.2 – MONITOR – 23" – SERVICE AREA (STANDARD)
1	D28.2 – PAPERTOWEL DISPENSER – ROLL (STANDARD)
1	D31 – WIRELESS BASE STATION
1	D33 – BATTERY CHARGER
1	D33 – HARDWARE RECEIVER
4	D37.11 – POS CASH STATION (STANDARD)
1	D38.7 – SANDWICH UNIT 48" (1219mm) – DEFIELD
2	D40.3 – LID DISPENSER – ICED (STANDARD)
1	D40.4 – LID DISPENSER – 4 STEP HOT/ANGLED (CSS)
1	D42.4 – MICROWAVE (STANDARD)
1	D46.6 – BAGEL TOASTER – HI-SPEED (STANDARD)
1	D57.2 – FONDANT WARMER – STANDARD
1	D62.15 – ICE MACHINE – STAND ALONE – HOSHIZAKI 2500B-J (STANDARD US)
1	D66.3 – CREAMER – DUAL VOLUME (STANDARD US)
1	D67.8 – HOT POWDERED DRINK MACHINE – MAX 3 (STANDARD)
1	D68.14 – COFFEE BREWER – BUNN CWT-35 W/HM SPOUT (OPTIONAL)
1	D68.8 – COFFEE BREWER – BUNN AXOM 12 CUP (DARK ROAST)
1	D69.3 – SUGAR DISPENSER – ISLAND (STANDARD US)
1	D72.14 – EXHAUST HOOD – COMBI OVEN
1	D73.4 – DUMP SINK – IN-COUNTER – SOURCED (US)
1	D73.5 – HAND SINK – BOH – SOURCED – (US)
2	D80.2 – SOUP COOKER/WARMER – QUADRUPLE – VOLRATH
2	D81.3L – U/C REFRIGERATOR – LEFT HINGE
2	D82 – SAFE DEPOSIT BOX (US)
1	D83.3 – VEGETABLE SINK – SOURCED – 18" x 18" (US)
1	D87.7 – ICED CAPP – FULL HEIGHT – TAYLOR 342 – DUAL WHIP
1	D93.2 – CAMP FRAME – MENSE (STANDARD)
1	D94.3 – POP FRAME – MENSE (STANDARD)
1	D95.1 – WALL CLOCK – WOOD
2	105 – STANTION POST (UPGRADE)
2	106 – STANTION POST (UPGRADE)
2	108.2 – BAGEL SABRE (STANDARD)
1	109 – GLAZER – TABLE TOP
1	109.1 – GLAZER STAND
4	119.2 – MENUBOARD – 23" – CEILING MOUNTED
2	122.3 – BAGEL/BREAD BASKET – WOOD – 42"
2	122.7 – BAGEL/BREAD BASKET – WOOD – 24"
3	128 – FLAVOUR SHOT (STANDARD)
1	129 – CUTLERY BIN
3	130.4 – ICED COFFEE – DISPENSER – NARROW (SITE SPECIFIC)
1	131.1 – DONUT/PASTRY – 4 x 5 (STANDARD)
1	131.11 – HOT HOLDING UNIT (STANDARD) – INSERT FOR 4 – 5 DONUT SHOWCASE
2	135.2 – HOT HOLDING UNIT – INSERT COOK (TEST ONLY)
1	136.4 – ESPRESSO MACHINE – NEXSTEP WLAND (STANDARD)
1	138 – TOASTER STAND
1	140 – ICE CADDY
1	145 – KNIFE HOLDER
1	147 – BIOHAZARD KIT
1	148 – FIRST AID KIT
1	157.1L – COMB OVEN – GLOBAL – (LEFT HINGE)
1	157.1L – COMB OVEN – GLOBAL – (LEFT HINGE)
1	159.3 – COMB OVEN STAND – DOUBLE (STANDARD)
1	159.5 – COMB OVEN STAND – INSERT SPEED RACK
1	160.1 – PANINI PRESS – DOUGH-PRO (STANDARD)
1	168.1 – FASCIA SIGN – CBS – 24"
2	208 – FAUCET – HANDSINK – IN-COUNTER – SOURCED (US)
2	3M COMBI FILTERS (STANDARD)
2	D04 – GLASS GUARD WITH POSTS
1	D05 – SNEEZE GUARD
1	D09 – Drive Thru Cash Counter – Perpendicular w/ Staging
1	D17 – MICROWAVE SHELF (STANDARD)
1	D21.2B – MERCHANDISE WALL – WALL MOUNT – 4FT
1	D21.5 – SWING GATE – SELF – OVAL – LARGE (SITE SPECIFIC)
1	D37.1H – BANNER – COFFEE – CURVED – 14in
1	D37.2H – BANNER – BAKERY – CURVED – 14in
1	D37.3H – BANNER – SOUP AND SANDWICH – CURVED – 14in
1	D74 – WALL MURAL – COFFEE CUP – 2nd SURFACE ACRYLIC
1	D21.4P1 – IMAGE – ICED CAPP (DUAL) – PVC ON STAND-OFFS – 3' x 2'
1	G2.2P1 – IMAGE – CROSSANTS – PVC ON STAND-OFFS – 3' x 2'
1	G3B2 – MERCHANDISER GRAPHIC KIT – 4FT KIT – FOR WALL MOUNT D21.1B
1	SIGF – FREEZER – 49-21-42-3
2	SIGF – FREEZER – 49-42-36-3
2	SIGF – FULL HEIGHT – 64-18-42-4
3	SIGF – FULL HEIGHT – 64-18-36-4
1	SIGF – FULL HEIGHT – 64-24-54-4
4	SIGF – FULL HEIGHT – 64-24-48-4
1	SIGF – FULL HEIGHT – 64-24-60-4
1	SIGF – FULL HEIGHT – 43-14-21-2
1	SIGF – HANGING RACK – 88-18-36-2
2	SIGF – OVERHEAD – 63-24-36
2	SIGF – OVERHEAD – 63-24-48
1	SIGF – OVERHEAD – 63-24-60
2	SIGF – OVERHEAD – ISLAND – 63.1-24-42

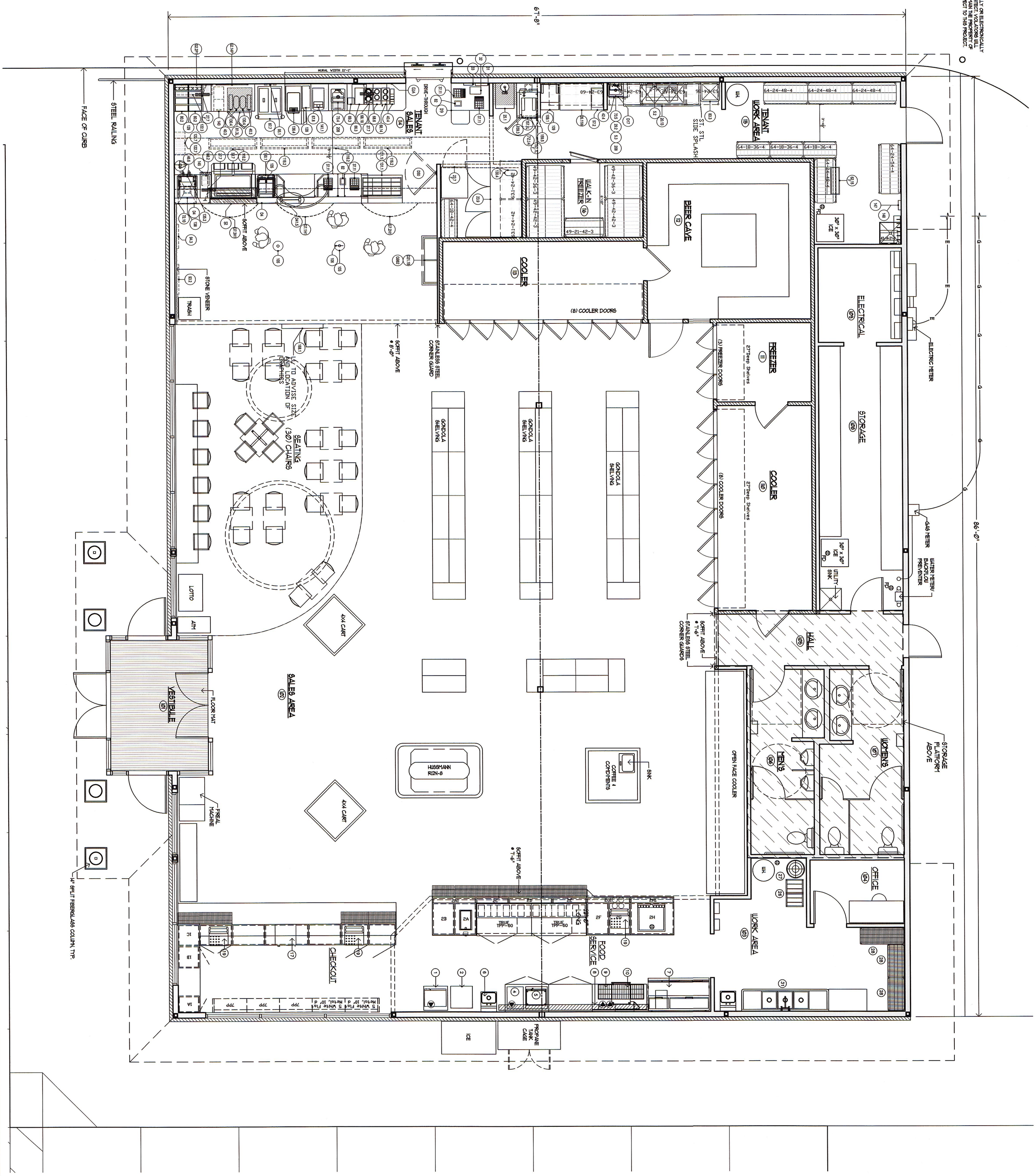

EQUIPMENT LIST

ITEM#	QTY	DESCRIPTION
1.	1	BREAD OVEN
2.	1	BREAD CABINET
3.	1	6' COUNTER
4.	1	CONVECTION OVEN
5.	2	DOUBLE STACK MICROWAVE OVEN
6.	1	DROP-IN HAND SINK
7.	1	6' PIZZA PREP TABLE
8.	3	55" LED MENU BOARDS
9.	1	5' STEEL TABLE
10.	2	DOUBLE STACK PIZZA OVENS
11.	1	DROP-IN COUNTERWELL
12.	1	SANDWICH UNIT
13.	1	SODA MACHINE
14.	1	PIZZA DISPLAY CASE
15.	1	PIZZA DISPLAY CASE
16.	1	CASH REGISTER
19.	3	4' STAINLESS STEEL SHELVING UNIT
25.	1	BAG IN BOX RACK
26.	1	BULK CO2
27.	4	STORAGE SHELVING
28.	1	3 BAY SINK
31.		

REGISTERED ARCHITECT JAMES S. HAGAN N. 012923 UNIVERSITY OF THE STATE OF NEW YORK

A-4

NICE N EASY FOR VALENTINE STORES

OUTER WASHINGTON STREET
WATERTOWN, NY

project:

FLOOR PLAN

scale: 1/4" = 1'-0"

by: AMB

date: 10 OCTOBER 2014

rev: 20 OCTOBER 2014

23 MARCH 2015

J.S. Hagan Architect P.C.
design build
180 intrepid lane syracuse, new york 13205 315-469-4282 fax 315-469-4276

THESE DRAWINGS SHALL NOT BE ALTERED MANUALLY OR ELECTRONICALLY WITHOUT THE WRITTEN AUTHORIZATION OF THE ARCHITECT. VIOLATORS WILL BE PROSECUTED. THIS DRAWING IS AND SHALL REMAIN THE PROPERTY OF THE ARCHITECT. IT IS TO BE USED ONLY WITH RESPECT TO THIS PROJECT.

© 2014 J. S. HAGAN, ARCHITECT

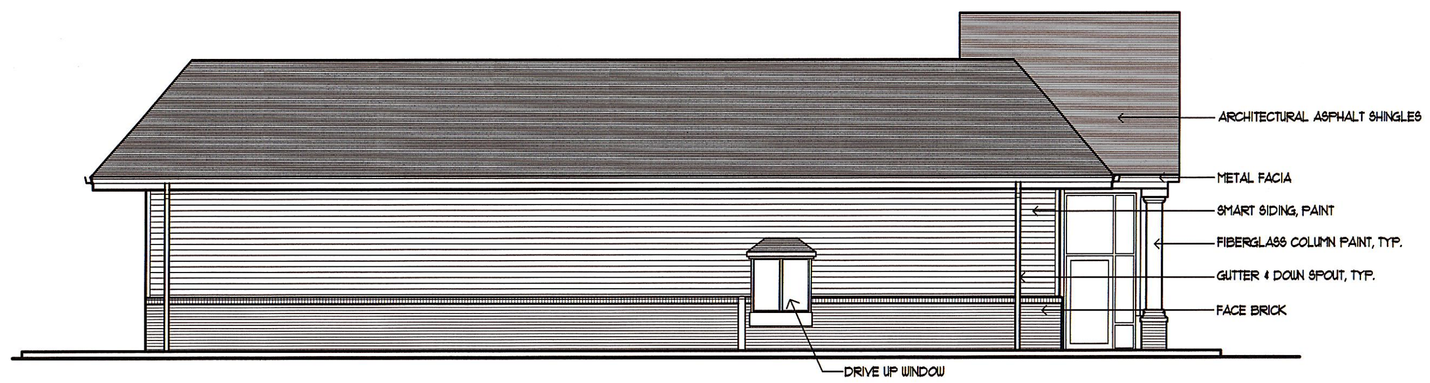

LEFT SIDE ELEVATION

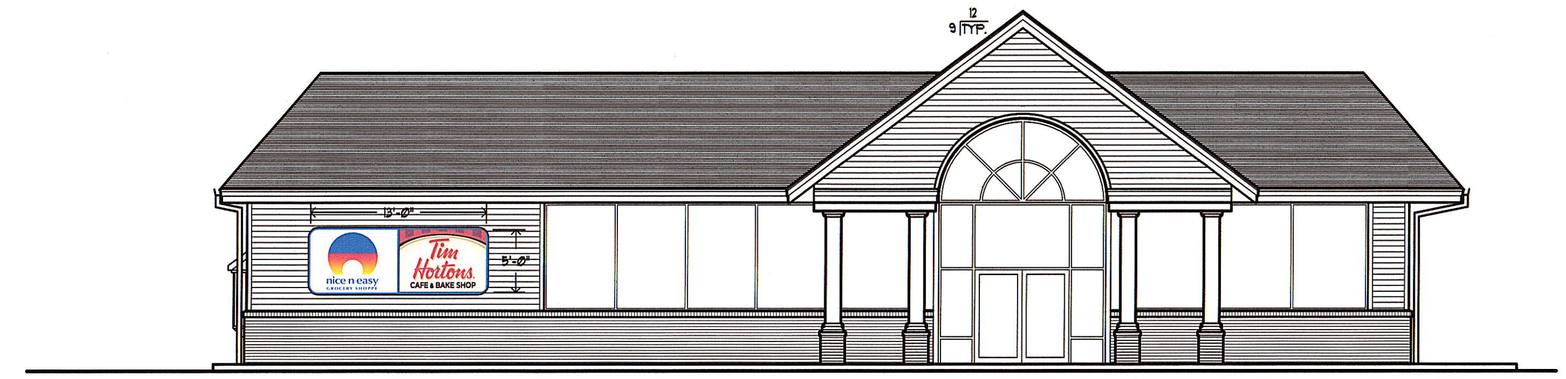

FRONT ELEVATION

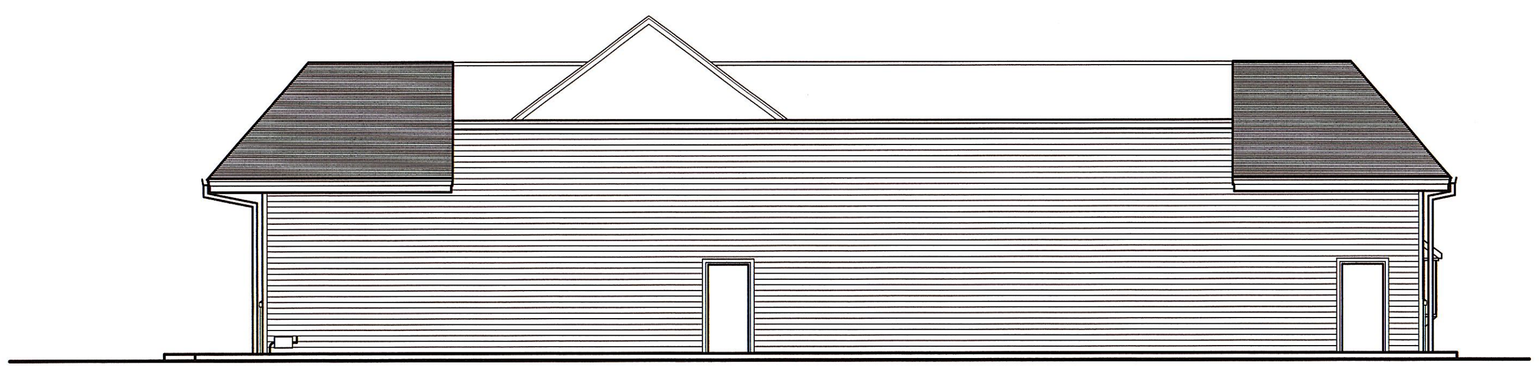

REAR ELEVATION

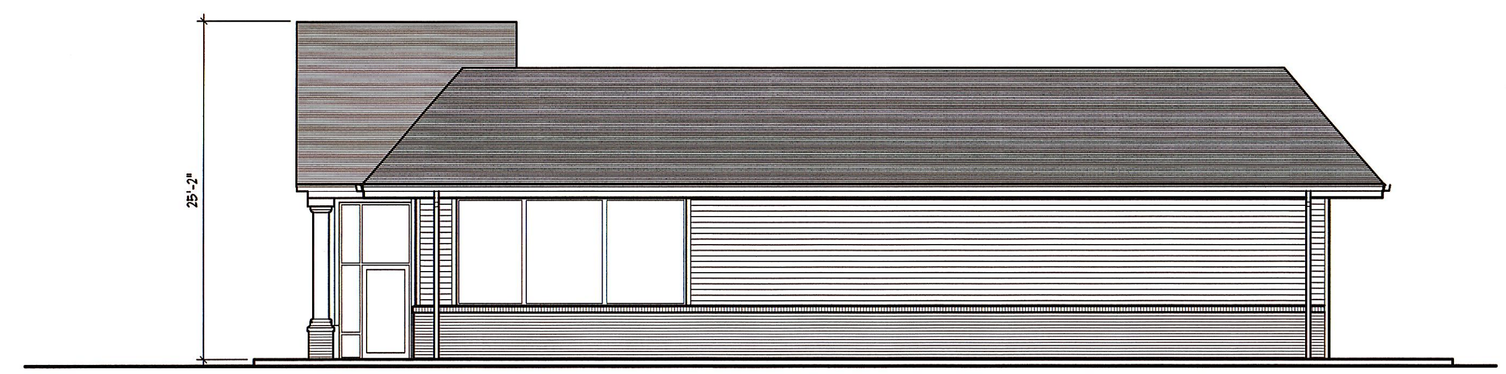

RIGHT SIDE ELEVATION

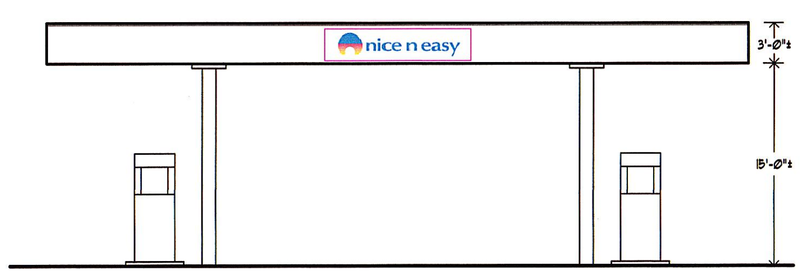

CANOPY
LEFT SIDE ELEVATION

FRONT ELEVATION

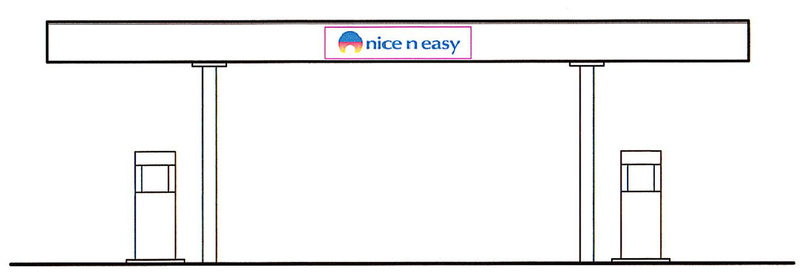

RIGHT SIDE ELEVATION

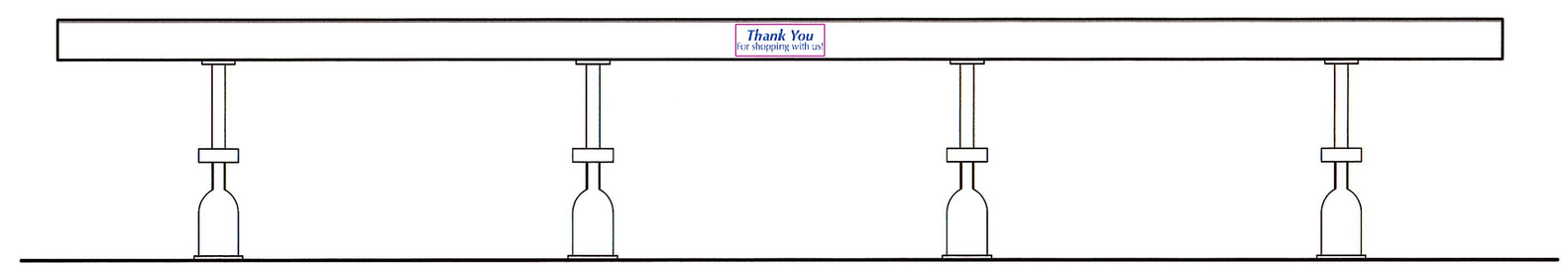

REAR ELEVATION

NICE N EASY FOR VALENTINE STORES

OUTER WASHINGTON STREET
WATERTOWN, NY

ELEVATIONS

scale: 1/8" = 1'-0" by: AMB project: date: 10 OCTOBER 2014 rev: 23 MARCH 2015 20 OCTOBER 2014

J.S. Hagan Architect P.C.
design build
180 intrepid lane syracuse, new york 13205 315-469-4282 fax: 315-469-4276

A-5

red leonard associates
5630 Bridgetown Rd, Ste 2 | Cincinnati, OH, 45248 | 513-574-9500
www.redleonard.com

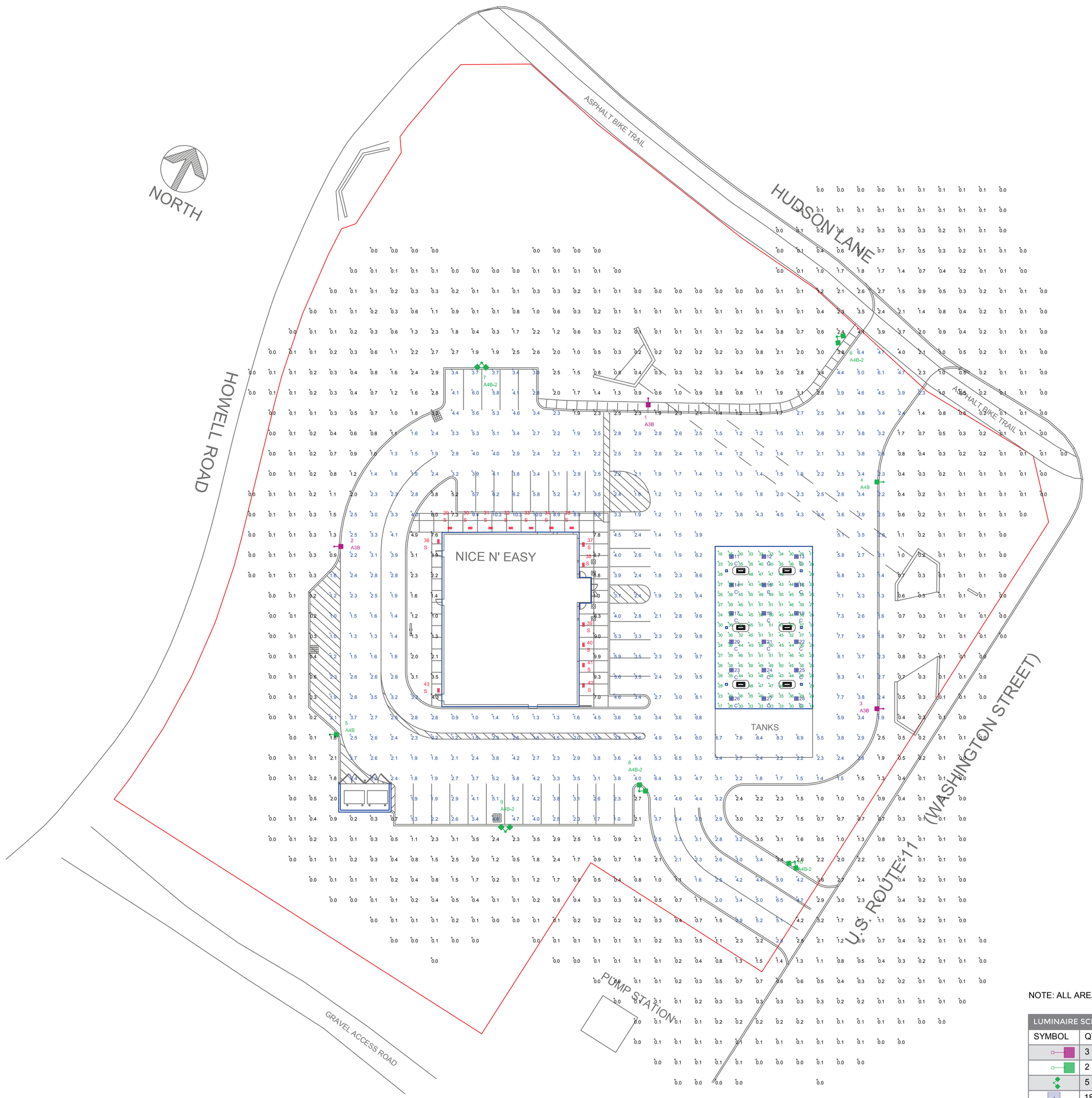

LUMINAIRE LOCATION SUMMARY		
LUM NO.	LABEL	MTG. HT.
1	A3B	22
2	A3B	22
3	A3B	22
4	A4B	22
5	A4B	22
6	A4B-2	22
7	A4B-2	22
8	A4B-2	22
9	A4B-2	22
10	A4B-2	22
11	C	15
12	C	15
13	C	15
14	C	15
15	C	15
16	C	15
17	C	15
18	C	15
19	C	15
20	C	15
21	C	15
22	C	15
23	C	15
24	C	15
25	C	15
26	C	15
27	C	15
28	C	15
29	S	12
30	S	12
31	S	12
32	S	12
33	S	12
34	S	12
35	S	12
36	S	12
37	S	12
38	S	12
39	S	12
40	S	12
41	S	12
42	S	12
43	S	12

NOTE: ALL AREA LIGHTS ON NEW 20 FT. POLE MOUNTED ON 2 FT. CONCRETE BASE

FOOTCANDLE LEVELS CALCULATED AT GRADE USING INITIAL LUMEN VALUES					
LABEL	AVG	MAX	MIN	AVG/MIN	MAX/MIN
PAVED AREA	3.34	10.3	0.9	3.71	11.44
UNDEFINED AREA	0.74	9.9	0.0	N.A.	N.A.
UNDER CANOPY	37.90	51	16	2.37	3.19

LUMINAIRE SCHEDULE									
SYMBOL	QTY	LABEL	ARRANGEMENT	LUMENS	LLF	ARR. WATTS	TOTAL WATTS	MANUFACTURER	DESCRIPTION
	3	A3B	SINGLE	8619	1.040	133	399	CREE, INC.	ARE-EDG-3MB-DA-08-E-UL-WH-525
	2	A4B	SINGLE	9258	1.040	133	266	CREE, INC.	ARE-EDG-4MB-DA-08-E-UL-WH-525
	5	A4B-2	2 @ 90 DEGREES	9258	1.040	266	1330	CREE, INC.	ARE-EDG-4MB-DA-08-E-UL-WH-525
	18	C	SINGLE	10912	1.040	101	1818	CREE, INC.	CAN-304-SL-RS-06-E-UL-WH-525
	15	S	SINGLE	4167	1.040	52	780	BETALED, A DIVISION OF RUUD LI	SFT-227-5M-RM-03-D-UL-WH-525

PERSONS USING THIS PROGRAM ARE ADVISED THAT THIS PROGRAM MAY CONTAIN ERRORS WHICH RED LEONARD ASSOCIATES, INC. OR ITS SOFTWARE PROVIDER HAVE NOT OBSERVED. IN ADDITION, THE USE OF THIS PROGRAM TO AID IN LAYOUT OF LIGHTING AND ESTIMATING MATERIAL QUANTITIES IS NOT INTENDED TO REMOVE THE RESPONSIBILITY OF THE USER TO VERIFY THE COMPLETENESS OF ANY BILL OF MATERIAL AND THAT THE LAYOUT OR USE OF LUMINAIRIES IS IN ACCORDANCE WITH ANY LOCAL, STATE OR FEDERAL STATUTES, REGULATIONS OR OTHER REQUIREMENTS, OR THE REQUIREMENTS OF ANY INSURANCE GROUP, ORGANIZATION OR CARRIER REGARDING LUMINAIRES AND THEIR APPLICATION.

FOR INFORMATIONAL AND ILLUSTRATION PURPOSES ONLY. ALL PRODUCT, SERVICE AND CORPORATE NAMES ARE THE PROPERTY OF THEIR RESPECTIVE OWNERS. PRODUCT SPECIFICATIONS AND QUANTITIES MAY VARY. THESE DOCUMENTS ARE THE PROPERTY OF RED LEONARD ASSOCIATES, INC. ANY USE OF THESE DOCUMENTS WITHOUT THE WRITTEN CONSENT OF JAYME J. LEONARD OF RED LEONARD ASSOCIATES, INC. IS STRICTLY PROHIBITED.

ILLUMINATION RESULTS SHOWN ON THIS LEOPTICS APPLICATION ARE BASED ON INFORMATION PROVIDED BY THE MANUFACTURER LISTED, USED IN CONJUNCTION WITH LUMINAIRE TEST PROCEDURES CONDUCTED UNDER LABORATORY CONDITIONS. ACTUAL PROJECT CONDITIONS DIFFERING FROM THESE PARAMETERS MAY AFFECT FIELD RESULTS. THE CUSTOMER IS RESPONSIBLE FOR VERIFYING COMPLIANCE WITH ANY APPLICABLE ELECTRICAL, LIGHTING, OR ENERGY CODE.

SCALE: 1" = 30'
LAYOUT BY: BJM
DWG SIZE: D
DATE: 9/17/14

PROJECT NAME:
NICE N EASY
WATERTOWN, NY.

DRAWING NUMBER:
RL-2321-S1

rla

AREA LIGHTS

CANOPY LIGHTS

SOFFIT LIGHTS

SYMBOL	QTY	LABEL
	3	A3B

ARE-EDG-3MB-DA-08-E-UL-WH-525

SYMBOL	QTY	LABEL
	2	A4B
	5	A4B-2

ARE-EDG-4MB-DA-08-E-UL-WH-525

SYMBOL	QTY	LABEL
	18	C

CAN-304-SL-RS-06-E-UL-WH-525

SYMBOL	QTY	LABEL
	15	S

SFT-227-5M-RM-03-D-UL-WH-525

ARE-EDG-3MB/3MP-DA

Cree Edge™ Area Luminaire – Type III Medium w/ Backlight Control – Direct Arm Mount

Product Description

Slim, low profile design minimizes wind load requirements. Luminaire sides are rugged cast aluminum with integral, weathertight LED driver compartments and high performance aluminum heat sinks. Convenient, interlocking mounting method. Mounting housing is rugged die cast aluminum and mounts to 3–6" (76–152mm) square or round pole. Luminaire is secured by two 5/16-18 UNC bolts spaced on 2" (51mm) centers.

Performance Summary

Utilizes BetaLED® Technology

Patented NanoOptic® Product Technology

Made in the U.S.A. of U.S. and imported parts

CRI: Minimum 70 CRI

CCT: 5700K (+ / - 500K) Standard, 4000K (+ / - 300K)

Limited Warranty[†]: 10 years on luminaire / 10 years on Colorfast DeltaGuard® finish

EPA and Weight: Reference EPA and Weight spec sheet

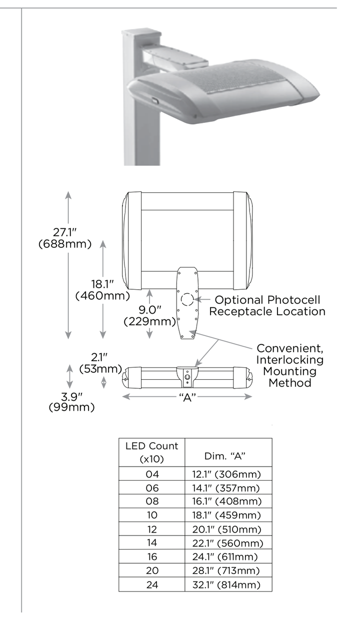

LED Count (x10)	Dim. "A"
04	12.1" (306mm)
06	14.1" (357mm)
08	16.1" (408mm)
10	18.1" (459mm)
12	20.1" (510mm)
14	22.1" (560mm)
16	24.1" (611mm)
20	28.1" (713mm)
24	32.1" (814mm)

Accessories

Field Installed Accessories
XA-BRDSPK Bird Spikes

Ordering Information

Example: ARE-EDG-3MB-DA-04-E-UL-SV-350-OPTIONS

Product	Optic	Mounting	LED Count (x10)	Series	Voltage	Color Options	Drive Current	Options
ARE-EDG		DA		E				
ARE-EDG	**3MB** Type III Medium w/ BLS **3MP** Type III Medium w/ Partial BLS	**DA** Direct Arm	**04** **06** **08** **10** **12** **14** **16** **20** **24**	**E**	**UL** Universal 120–277V **UH** Universal 347–480V **34** 347V	**SV** Silver (Standard) **BK** Black **BZ** Bronze **PB** Platinum Bronze **WH** White	**350*** 350mA **525**** 525mA **700***** 700mA	**40K** 4000K Color Temperature - Color temperature per luminaire **DIM** 0–10V Dimming - Control by others - Refer to dimming spec sheet for details - Can't exceed specified drive current **F** Fuse - When code dictates fusing, use time delay fuse - Not available with all ML options. Refer to ML spec sheet for availability with ML options **HL** Hi / Low (175 / 350 / 525 Dual Circuit Input) - Refer to ML spec sheet for details - Sensor not included **P** Photocell - Not available with all ML options. Refer to ML spec sheet for availability with ML options - Must specify voltage other than UH **R** NEMA Photocell Receptacle - Not available with all ML options. Refer to ML spec sheet for availability with ML options - Photocell by others **ML** Multi-Level - Refer to ML spec sheet for details

[†] See www.cree.com/lighting/products/warranty for warranty terms
* Available on luminaires with 60–240 LEDs.
** Available on luminaires with 40–160 LEDs.
*** Available on luminaires with 40–60 LEDs.

BetaLED® TECHNOLOGY — Rev. Date: 09/27/13 — CREE

www.cree.com/lighting T (800) 236-6800 F (262) 504-5415

ARE-EDG-3MB/3MP-DA

Product Specifications

CONSTRUCTION & MATERIALS

- Slim, low profile, minimizing wind load requirements
- Luminaire sides are rugged die cast aluminum with integral, weathertight LED driver compartments and high performance heat sinks
- Convenient interlocking mounting method. Mounting housing is rugged die cast aluminum mounting to 3–6" (76–152mm) square or round pole, secured by two 5 / 16-18 UNC bolts spaced on 2" (51mm) centers
- Includes leaf / debris guard
- Exclusive Colorfast DeltaGuard® finish features an E-Coat epoxy primer with an ultra-durable powder topcoat, providing excellent resistance to corrosion, ultraviolet degradation and abrasion. Standard is silver. Bronze, black, white, and platinum bronze are also available

ELECTRICAL SYSTEM

- **Input Voltage:** 120–277V or 347–480V, 50 / 60Hz, Class 1 drivers
- **Power Factor:** > 0.9 at full load
- **Total Harmonic Distortion:** < 20% at full load
- Integral weathertight electrical box with terminal strips (12Ga–20Ga) for easy power hookup
- Integral 10kV surge suppression protection standard
- To address inrush current, slow blow fuse or type C / D breaker should be used

REGULATORY & VOLUNTARY QUALIFICATIONS

- cULus Listed
- Suitable for wet locations
- Enclosure rated IP66 per IEC 60529 when ordered without P or R options
- Consult factory for CE Certified products
- Certified to ANSI C136.31-2001, 3G bridge and overpass vibration standards
- 10kV surge suppression protection tested in accordance with IEEE / ANSI C62.41.2
- Luminaire and finish endurance tested to withstand 5,000 hours of elevated ambient salt fog conditions as defined in ASTM Standard B 117
- Product qualified on the DesignLights Consortium™ ("DLC") Qualified Products List ("QPL") when ordered without full backlight control shield
- Meets Buy American requirements within ARRA

Photometry

All published luminaire photometric testing performed to IESNA LM-79-08 standards by a NVLAP certified laboratory.

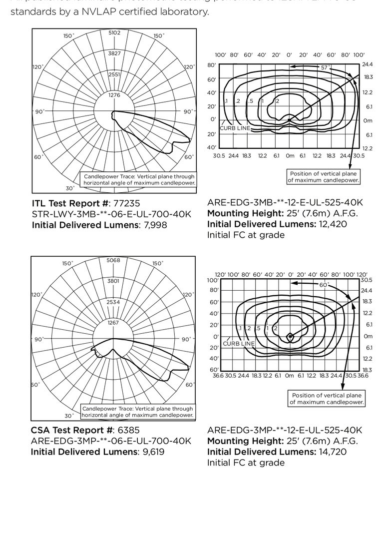

ITL Test Report #: 77235
STR-LWY-3MB-**-08-E-UL-700-40K
Initial Delivered Lumens: 7,998

ARE-EDG-3MB-**-12-E-UL-525-40K
Mounting Height: 25' (7.6m) A.F.G.
Initial Delivered Lumens: 12,420
Initial FC at grade

CSA Test Report #: 6385
ARE-EDG-3MP-**-06-E-UL-700-40K
Initial Delivered Lumens: 9,619

ARE-EDG-3MP-**-12-E-UL-525-40K
Mounting Height: 25' (7.6m) A.F.G.
Initial Delivered Lumens: 14,720
Initial FC at grade

IES Files
To obtain an IES file specific to your project consult:
http://www.cree.com/lighting/tools-and-support/exterior-ies-configuration-tool

Lumen Output, Electrical, and Lumen Maintenance Data

Type III Medium Distribution w/ BLS — 350mA @ 25°C (77°F); 525mA @ 25°C (77°F); 700mA @ 25°C (77°F) — 50K Hours Projected Lumen Maintenance Factor @ 15°C (59°F)***: 93%, 92%, 90%

[illegible]

* Actual production yield may vary between -4 and +10% of initial delivered lumens.
** For more information on the IES BUG (Backlight-Uplight-Glare) Rating visit www.iesna.org/PDF/Erratas/TM-15-11BugRatingsAddendum.pdf
*** For recommended lumen maintenance factor data see TD-13.

© 2013 Cree, Inc. All rights reserved. For informational purposes only. Content is subject to change. See www.cree.com/patents for patents that cover these products. Cree®, the Cree logo, BetaLED®, NanoOptic®, the BetaLED Technology logo, and Colorfast DeltaGuard® are registered trademarks, and Cree Edge™ is a trademark of Cree, Inc. The UL logo is a registered trademark of UL LLC. DesignLights Consortium™ and the DLC QPL logo are trademarks of Northeast Energy Efficiency Partnerships, Inc.

www.cree.com/lighting T (800) 236-6800 F (262) 504-5415

ARE-EDG-4MB/4MP-DA

Cree Edge™ Area Luminaires – Type IV Medium w/ Backlight Control – Direct Arm Mount

Product Description

Slim, low profile design minimizes wind load requirements. Luminaire sides are rugged cast aluminum with integral, weathertight LED driver compartments and high performance aluminum heat sinks. Convenient, interlocking mounting method. Mounting housing is rugged die cast aluminum and mounts to 3–6" (76–152mm) square or round pole. Luminaire is secured by two 5/16-18 UNC bolts spaced on 2" (51mm) centers.

Performance Summary

Utilizes BetaLED® Technology

Patented NanoOptic® Product Technology

Made in the U.S.A. of U.S. and imported parts

CRI: Minimum 70 CRI

CCT: 5700K (+ / - 500K) Standard, 4000K (+ / - 300K)

Limited Warranty[†]: 10 years on luminaire / 10 years on Colorfast DeltaGuard® finish

EPA and Weight: Reference EPA and Weight spec sheet

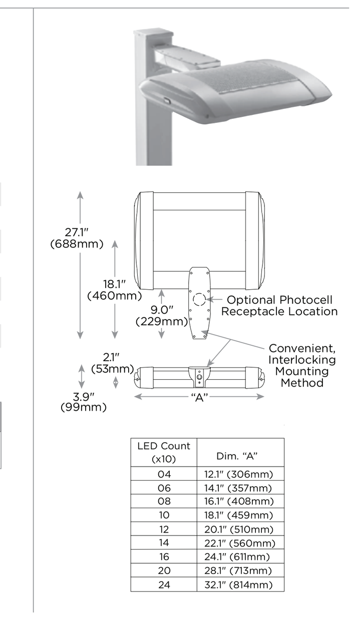

LED Count (x10)	Dim. "A"
04	12.1" (306mm)
06	14.1" (357mm)
08	16.1" (408mm)
10	18.1" (459mm)
12	20.1" (510mm)
14	22.1" (560mm)
16	24.1" (611mm)
20	28.1" (713mm)
24	32.1" (814mm)

Accessories

Field Installed Accessories
XA-BRDSPK Bird Spikes

Ordering Information

Example: ARE-EDG-4MB-DA-04-E-UL-SV-350-OPTIONS

Product	Optic	Mounting	LED Count (x10)	Series	Voltage	Color Options	Drive Current	Options
ARE-EDG		DA		E				
ARE-EDG	**4MB** Type IV Medium w/ BLS **4MP** Type IV Medium w/ Partial BLS	**DA** Direct Arm	**04** **06** **08** **10** **12** **14** **16** **20** **24**	**E**	**UL** Universal 120–277V **UH** Universal 347–480V **34** 347V	**SV** Silver (Standard) **BK** Black **BZ** Bronze **PB** Platinum Bronze **WH** White	**350*** 350mA **525**** 525mA **700***** 700mA	**40K** 4000K Color Temperature - Color temperature per luminaire **DIM** 0–10V Dimming - Control by others - Refer to dimming spec sheet for details - Can't exceed specified drive current **F** Fuse - When code dictates fusing, use time delay fuse - Not available with all ML options. Refer to ML spec sheet for availability with ML options **HL** Hi / Low (175 / 350 / 525 Dual Circuit Input) - Refer to ML spec sheet for details - Sensor not included **P** Photocell - Not available with all ML options. Refer to ML spec sheet for availability with ML options - Must specify voltage other than UH **R** NEMA Photocell Receptacle - Not available with all ML options. Refer to ML spec sheet for availability with ML options - Photocell by others **ML** Multi-Level - Refer to ML spec sheet for details

[†] See www.cree.com/lighting/products/warranty for warranty terms
* Available on luminaires with 60–240 LEDs.
** Available on luminaires with 40–160 LEDs.
*** Available on luminaires with 40–60 LEDs.

BetaLED® TECHNOLOGY — Rev. Date: 09/27/13 — CREE

www.cree.com/lighting T (800) 236-6800 F (262) 504-5415

ARE-EDG-4MB/4MP-DA

Product Specifications

CONSTRUCTION & MATERIALS

- Slim, low profile, minimizing wind load requirements
- Luminaire sides are rugged die cast aluminum with integral, weathertight LED driver compartments and high performance heat sinks
- Convenient interlocking mounting method. Mounting housing is rugged die cast aluminum mounting to 3–6" (76–152mm) square or round pole, secured by two 5 / 16-18 UNC bolts spaced on 2" (51mm) centers
- Includes leaf / debris guard
- Exclusive Colorfast DeltaGuard® finish features an E-Coat epoxy primer with an ultra-durable powder topcoat, providing excellent resistance to corrosion, ultraviolet degradation and abrasion. Standard is silver. Bronze, black, white, and platinum bronze are also available

ELECTRICAL SYSTEM

- **Input Voltage:** 120–277V or 347–480V, 50 / 60Hz, Class 1 drivers
- **Power Factor:** > 0.9 at full load
- **Total Harmonic Distortion:** < 20% at full load
- Integral weathertight electrical box with terminal strips (12Ga–20Ga) for easy power hookup
- Integral 10kV surge suppression protection standard
- To address inrush current, slow blow fuse or type C / D breaker should be used

REGULATORY & VOLUNTARY QUALIFICATIONS

- cULus Listed
- Suitable for wet locations
- Enclosure rated IP66 per IEC 60529 when ordered without P or R options
- Consult factory for CE Certified products
- Certified to ANSI C136.31-2001, 3G bridge and overpass vibration standards
- 10kV surge suppression protection tested in accordance with IEEE / ANSI C62.41.2
- Luminaire and finish endurance tested to withstand 5,000 hours of elevated ambient salt fog conditions as defined in ASTM Standard B 117
- Product qualified on the DesignLights Consortium™ ("DLC") Qualified Products List ("QPL") when ordered without full backlight control shield
- Meets Buy American requirements within ARRA

Photometry

All published luminaire photometric testing performed to IESNA LM-79-08 standards by a NVLAP certified laboratory.

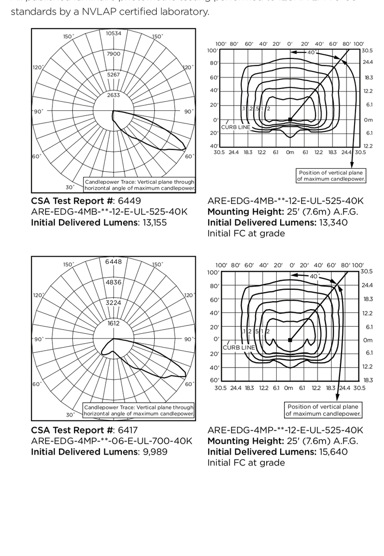

CSA Test Report #: 6449
ARE-EDG-4MB-**-12-E-UL-525-40K
Initial Delivered Lumens: 13,155

ARE-EDG-4MB-**-12-E-UL-525-40K
Mounting Height: 25' (7.6m) A.F.G.
Initial Delivered Lumens: 13,340
Initial FC at grade

CSA Test Report #: 6417
ARE-EDG-4MP-**-06-E-UL-700-40K
Initial Delivered Lumens: 9,989

ARE-EDG-4MP-**-12-E-UL-525-40K
Mounting Height: 25' (7.6m) A.F.G.
Initial Delivered Lumens: 15,640
Initial FC at grade

IES Files
To obtain an IES file specific to your project consult:
http://www.cree.com/lighting/tools-and-support/exterior-ies-configuration-tool

Lumen Output, Electrical, and Lumen Maintenance Data

Type IV Medium Distribution w/ BLS — 350mA @ 25°C (77°F); 525mA @ 25°C (77°F); 700mA @ 25°C (77°F) — 50K Hours Projected Lumen Maintenance Factor @ 15°C (59°F)***: 93%, 92%, 90%

[illegible]

© 2013 Cree, Inc. All rights reserved. For informational purposes only. Content is subject to change. See www.cree.com/patents for patents that cover these products. Cree®, the Cree logo, BetaLED®, NanoOptic®, the BetaLED Technology logo, and Colorfast DeltaGuard® are registered trademarks, and Cree Edge™ is a trademark of Cree, Inc. The UL logo is a registered trademark of UL LLC. DesignLights Consortium™ and the DLC QPL logo are trademarks of Northeast Energy Efficiency Partnerships, Inc.

www.cree.com/lighting T (800) 236-6800 F (262) 504-5415

CAN-304-SL-RS

304 Series™ Canopy Luminaire – Sparkle Petroleum – Recessed Mount for Single Skin Canopies

Product Description

Luminaire housing is constructed from rugged die cast aluminum components. LED driver is mounted in a sealed weathertight center chamber that allows for access from below the fixture. Luminaire housing incorporates integral high performance heatsink fins specifically designed for LED canopy application. Luminaire mounts directly to the canopy deck and is secured in place with a die-cast aluminum trim frame. Luminaire housing is provided with factory applied foam gasket and provides for a watertight seal between luminaire housing and canopy deck. Integral junction box allows ease of installation without need to open luminaire. Suitable for use in single skin canopies with 16" (406 mm) wide panels. See 227 Series for canopies using 12" (305mm) deck sections. Designed for canopies of 19 – 22 gauge (maximum 0.040" [1 mm] thickness).

Performance Summary

Utilizes BetaLED® Technology

Patented NanoOptic® Product Technology

Made in the U.S.A. of U.S. and imported parts

CRI: Minimum 70 CRI

CCT: 5700K (+ / - 500K) Standard, 4000K (+ / - 300K)

Limited Warranty[†]: 10 years on luminaire / 10 years on Colorfast DeltaGuard® finish

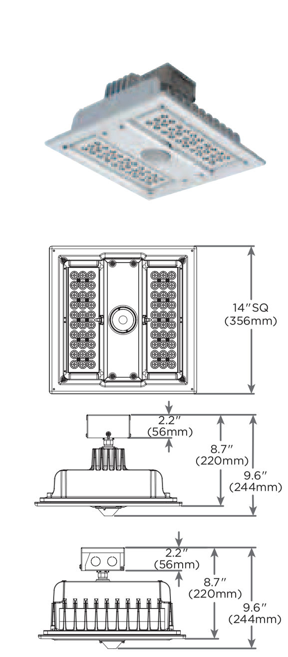

Ordering Information

Example: CAN-304-SL-RS-04-E-UL-SV-350-OPTIONS

Product	Optic	Mounting	LED Count (x10)	Series	Voltage	Color Options	Drive Current	Options
CAN-304	SL	RS		E				
CAN-304	**SL** Sparkle Petroleum	**RS** Recessed Single Skin	**04** **06**	**E**	**UL** Universal 120–277V **UH** Universal 347–480V	**WH** White (Standard) **SV** Silver **BK** Black **BZ** Bronze **PB** Platinum Bronze	**700**[*] 700mA **525** 525mA **350** 350mA	**40K** 4000K Color Temperature - Color temperature per luminaire **DIM** 0–10V Dimming - Control by others - Refer to dimming spec sheet for availability and additional information - Can't exceed specified drive current **F** Fuse - When code dictates fusing use time delay fuse - Not available with all multi-level options. Refer to multi-level spec sheet for availability and additional information **ML** Multi-Level - Refer to multi-level spec sheet for availability and additional information

[†] See www.cree.com/lighting/products/warranty for warranty terms.
* Requires marked spacing 48" (1,219mm) x 24" (610mm) x 3" (76mm); (48" [1,219mm] luminaire to luminaire, 24" [610mm] luminaire to side wall, 6" [152mm] above luminaire.

BetaLED® TECHNOLOGY — RoHS — Rev. Date: 06/26/13 — CREE

www.cree.com/lighting T (800) 236-6800 F (262) 504-5415

CAN-304-SL-RS

Product Specifications

CONSTRUCTION & MATERIALS

- Luminaire housing is constructed from rugged die cast aluminum components
- LED driver is mounted in a sealed weathertight center chamber that allows for access from below the luminaire
- Incorporates integral high performance heat sink fins specifically designed for LED canopy applications
- Provided with factory applied foam gasket and provides for a watertight seal between luminaire housing and canopy deck
- Mounts directly to the canopy deck and is secured in place with a die cast aluminum trim frame
- Integral junction box allows ease of installation without need to open luminaire
- Suitable for use in single skin canopies with 16" (406mm) wide panels
- Designed for canopies of 19–22 gauge (maximum 0.040" [1mm] thickness)
- See 227 Series canopies for canopies using 12" (305mm) deck sections
- Exclusive Colorfast DeltaGuard® finish features an E-Coat epoxy primer with an ultra-durable powder topcoat, providing excellent resistance to corrosion, ultraviolet degradation and abrasion. Standard is white. Bronze, black, silver, and platinum bronze are also available

ELECTRICAL SYSTEM

- **Input Voltage:** 120–277V or 347–480V, 50 / 60Hz, Class 1 drivers
- **Power Factor:** > 0.9 at full load
- **Total Harmonic Distortion:** < 20% at full load
- Integral weathertight electrical box with terminal strips (12Ga–20Ga) for easy power hookup
- Integral 10kV surge suppression protection standard
- To address inrush current, slow blow fuse or type C / D breaker should be used

REGULATORY & VOLUNTARY QUALIFICATIONS

- cULus Listed
- Suitable for wet locations
- Enclosure rated IP66 per IEC 60529
- Consult factory for CE Certified products
- 10kV surge suppression protection tested in accordance with IEEE / ANSI C62.41.2
- Luminaire and finish endurance tested to withstand 5,000 hours of elevated ambient salt fog conditions as defined in ASTM Standard B 117
- Pending product qualification on the DesignLights Consortium ("DLC") Qualified Products List ("QPL") when ordered with PS or SL optics
- RoHS Compliant
- Meets Buy American requirements within ARRA

Photometry

All published luminaire photometric testing performed to IESNA LM-79-08 standards by independent Testing Laboratories, a NVLAP certified laboratory.

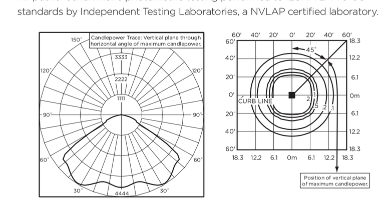

ITL Test Report #: 77415
CAN-304-SL-**-06-E-UL-700-40K
Initial Delivered Lumens: 12,707

CAN-304-SL-**-06-E-UL-700-40K
Mounting Height: 15' (4.6m)
Initial Delivered Lumens: 12,760
Initial FC at grade

IES Files
To obtain an IES file specific to your project consult:
http://www.cree.com/lighting/tools-and-support/exterior-ies-configuration-tool

Lumen Output, Electrical, and Lumen Maintenance Data

LED Count (x10)	5700K Initial Delivered Lumens*	5700K BUG Ratings**	4000K Initial Delivered Lumens*	4000K BUG Ratings**	System Watts 120–480V	120V	208V	240V	277V	347V	480V	50K Hours Projected Lumen Maintenance Factor*** @ 15°C (59°F)
350mA @ 25°C (77°F)												
04	5,249	B2 U0 G1	5,055	B2 U0 G1	46	0.39	0.24	0.22	0.21	0.15	0.12	94%
06	7,984	B3 U0 G1	7,656	B2 U0 G1	69	0.57	0.34	0.30	0.28	0.21	0.16	
525mA @ 25°C (77°F)												
04	7,349	B2 U0 G1	7,077	B2 U0 G1	71	0.59	0.35	0.31	0.28	0.21	0.16	93%
06	10,912	B3 U0 G1	10,508	B3 U0 G1	103	0.84	0.49	0.43	0.38	0.30	0.22	
700mA @ 25°C (77°F)												
04	8,924	B3 U0 G1	8,593	B3 U0 G1	94	0.79	0.46	0.40	0.36	0.28	0.21	91%
06	13,250	B3 U0 G1	12,760	B3 U0 G1	135	1.14	0.65	0.57	0.50	0.40	0.29	

* Actual production yield may vary between -4 and +10% of initial delivered lumens.
** For more information on the IES BUG (Backlight-Uplight-Glare) Rating visit www.iesna.org/PDF/Erratas/TM-15-11BugRatingsAddendum.pdf
*** For recommended lumen maintenance factor data see TD-13. Calculated L_{70} based on 6,000 hours LM-80-08 testing > 150,000 hours.

© 2013 Cree, Inc. All rights reserved. For informational purposes only. Content is subject to change. See www.cree.com/patents for patents that cover these products. Cree®, the Cree logo, BetaLED®, NanoOptic®, and Colorfast DeltaGuard® are registered trademarks, and the BetaLED Technology logo and 304 Series™ are trademarks of Cree, Inc.

www.cree.com/lighting T (800) 236-6800 F (262) 504-5415

SFT-227-5M-RM-03 BetaLED® Recessed Soffit Luminaire – IC Rated

Rev. Date: 2/13/12

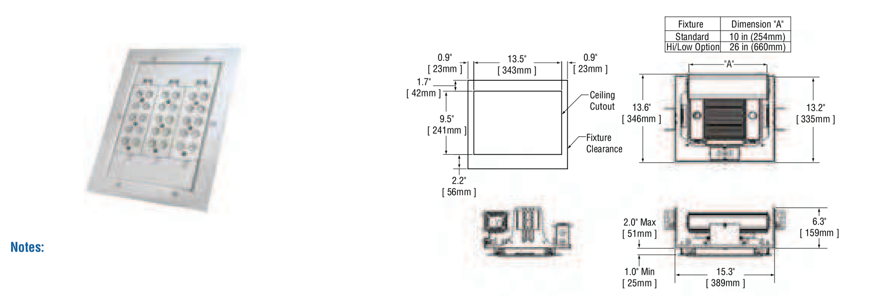

Notes:

Product	Family	Optic	Mounting	# of LEDs (x 10)	LED Series	Voltage	Color Options	Drive Current	Factory-Installed Options
SFT	227	5M[1]	RM[2]	03	D	**UL** Universal 120–277V **UH** Universal 347–480V **12** 120V **20** 208V **24** 240V **27** 277V **34** 347V **48** 480V	**WH** White (Standard) **SV** Silver **BK** Black **BZ** Bronze **PB** Platinum Bronze	**525** 525mA (Standard) **350** 350mA	Please type additional options in manually on the lines provided above. **40K** 4000K Color Temperature[3] **F** Fuse[4,5] For remodel option, see remodel spec sheet

Footnotes

1. IESNA Type V Medium distribution
2. Recessed soffit mount for new construction
3. Color temperature per fixture; 5700K standard; minimum 70 CRI
4. Must specify voltage other than UL, UH, or 34
5. When code dictates fusing use time delay fuse

LED PERFORMANCE SPECS

# of LEDs	Initial Delivered Lumens – Type V Medium @ 5700K	BUG Rating**	Initial Delivered Lumens – Type V Medium @ 4000K	BUG Rating**	System Watts 120–480V	Total Current @ 120V	Total Current @ 208V	Total Current @ 240V	Total Current @ 277V	Total Current @ 347V	Total Current @ 480V	L_{70} Hours* @ 25°C (77°F)	50K Hours Lumen Maintenance Factor* @ 15°C (59°F)
350mA Fixture Operating at 25°C (77°F)													
30	2,976 (03)	2 0 1	2,743 (03)	2 0 1	36	0.30	0.19	0.17	0.17	0.12	0.10	> 150,000	90%
525mA (Standard) Fixture Operating at 25°C (77°F)													
30	4,167 (03)	3 0 1	3,840 (03)	2 0 1	52	0.44	0.26	0.24	0.21	0.13	0.13	128,000	88%

* For recommended lumen maintenance factor data see TD-13
** For more information on the IES BUG (Backlight-Uplight-Glare) Rating visit www.iesna.org/PDF/Erratas/TM-15-11BugRatingsAddendum.pdf

© 2012 Ruud Lighting Inc. – A Cree Company. All rights reserved. The information in this document is subject to change without notice.
9201 Washington Ave • Racine, WI 53406-3772 • 800-236-6800 • www.BetaLED.com

Made in the U.S.A. of U.S. and imported parts.
Meets Buy American requirements within the ARRA.

SFT-227-5M-RM-03 BetaLED® Recessed Soffit Luminaire – IC Rated

Rev. Date: 2/13/12

General Description

High performance energy efficient LED down light, designed for use in drop ceilings or new construction applications with 16" (406mm) to 24" (610mm) on center building construction. Heavy gauge steel recessed mounting frame features 1-1/2" (38mm) deep aperture throat to accommodate most standard ceiling thicknesses, and a universal mounting brackets that accept 1/2" (13mm) EMT conduit, C-channel mounting bars or flat bar hangers with 5" (127mm) vertical adjustment from either above or below the ceiling. An oversized junction box is listed for eight #12 AWG feed through wires.

Luminaire sides are rugged cast aluminum with high performance extruded aluminum heat sink specifically designed for high power LED. It is factory assembled to the trim plate and wired to the driver.

Driver compartment is constructed of anodized extruded aluminum with stainless steel end panels for exceptional thermal performance. Driver is factory wired to the LED modules and features a quick connect power harness.

Five year limited warranty on luminaire.

Electrical

Modular design accommodates varied lighting output from high power, white, 5700K (+/- 500K per full fixture), minimum 70 CRI, long life LED sources. Optional 4000K (+/- 300K per full fixture) also available. 120–277V 50/60 Hz, Class 1 LED drivers are standard. 347–480VHz driver is optional. LED drivers have power factor >90% and THD <20% at full load. Units provided with integral 10kV surge suppression protection standard. Surge protection tested in accordance with IEEE/ANSI C62.41.2.

Luminaire is Type IC in accordance with Article 410 of the NEC and UL 1598. It is suitable for direct contact with insulation.

Luminaire is listed for eight #12 AWG, 90C rated through branch circuit wires.

Meets FCC Title 47 CFR Part 18, Non-Consumer EMI and RFI emission levels.

Testing & Compliance

UL listed in the U.S. and Canada for wet locations under covered ceilings. Consult factory for CE certified product. RoHS compliant. International Dark-Sky Association approved.

Finish

Exclusive Colorfast DeltaGuard® finish on all cast aluminum components features an E-Coat epoxy primer with an ultra-durable white powder topcoat, providing excellent resistance to corrosion, ultraviolet degradation and abrasion. Bronze, black, silver and platinum bronze powder topcoats are also available. Clear anodized finish on extruded aluminum heat sink. The finish is covered by our 10 year limited warranty.

Fixture and finish are endurance tested to withstand 5,000 hours of elevated ambient salt fog conditions as defined in ASTM Standard B 117.

Patents

U.S. and international patents granted and pending. BetaLED is a division of Ruud Lighting, Inc. For a listing of Ruud Lighting, Inc. patents, visit www.uspto.gov.

Photometrics

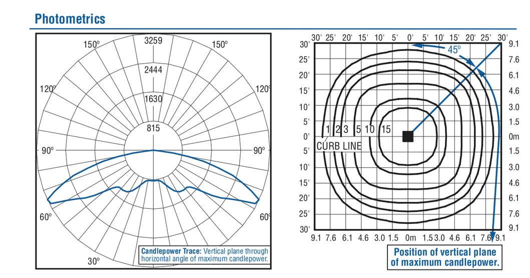

Independent Testing Laboratories certified test. Report No. ITL70412. Candlepower trace of 4300K, 30 LED recessed soffit luminaire with IESNA Type V Medium distribution. Luminaire with 10,296 initial delivered lumens operating at 525mA. **All published luminaire photometric testing performed to IESNA LM-79-08 standards.**

Isofootcandle plot of 4000K, 30 LED recessed soffit luminaire with IESNA Type V Medium optic mounted at 15' (4.6m) A.F.G. Luminaire with 3,840 initial delivered lumens operating at 525mA. Initial FC at grade.

Field-Installed Accessories

Mounting C Channel - 30" (762mm) Long XA-MC30

Mounting C Channel - 14" (356mm) Long XA-MC14

Mounting C Channel - 22" (559mm) Long XA-MC22

Mounting Brackets (Kit contains 4) XA-MB4

Remote Motion Sensor Kit
Used to control a single or series of fixtures as On/Off controller or Hi/Low controller with HL option (rated for up to 800 watts @ 120V or 1200 watts @ 277V)
XA-OMS108-UWL Up to 8' (2.4m) mounting height
XA-OMS120-UWL Up to 20' (6.1m) mounting height
XA-OMS140-UWL Up to 40' (12.2m) mounting height

© 2012 Ruud Lighting Inc. – A Cree Company. All rights reserved. The information in this document is subject to change without notice.
9201 Washington Ave • Racine, WI 53406-3772 • 800-236-6800 • www.BetaLED.com

Made in the U.S.A. of U.S. and imported parts.
Meets Buy American requirements within the ARRA.

FOR INFORMATIONAL AND ILLUSTRATION PURPOSES ONLY. ALL PRODUCT, SERVICE AND CORPORATE NAMES ARE THE PROPERTY OF THEIR RESPECTIVE OWNERS. PRODUCT SPECIFICATIONS AND QUANTITIES MAY VARY. THESE DOCUMENTS ARE THE PROPERTY OF RED LEONARD ASSOCIATES, INC. ANY USE OF THESE DOCUMENTS WITHOUT THE WRITTEN CONSENT OF JAYME J. LEONARD OF RED LEONARD ASSOCIATES, INC. IS STRICTLY PROHIBITED.