CITY OF WATERTOWN, NEW YORK
AGENDA

This shall serve as notice that the next regularly scheduled meeting of the City Council will be held on Monday, March 4, 2013, at 7:00 p.m. in the City Council Chambers, 245 Washington Street, Watertown, New York.

MOMENT OF SILENCE

PLEDGE OF ALLEGIANCE

ROLL CALL

ADOPTION OF MINUTES

COMMUNICATIONS

PRIVILEGE OF THE FLOOR

RESOLUTIONS

Resolution No. 1 -	Authorizing Application for NYS Division of Homeland Security and Emergency Services Grant, Fire Department
Resolution No. 2 -	Approving Supplemental Agreement for Construction Inspection Services, Watertown Swimming Pools Resurfacing Project, C&S Engineers, Inc.
Resolution No. 3 -	Approving Supplemental Appropriation No. 3 For Fiscal Year 2012-13 for Various Accounts
Resolution No. 4 -	Approving Amendment No. 1 to Professional Services Agreement, GHD Consulting Engineers LLC
Resolution No. 5 -	Finding That the Construction of the Thompson Park Parallel Water Main Project Will Not Have a Significant Impact on the Environment

ORDINANCES

Ordinance No. 1 -	An Ordinance Authorizing the Issuance of $1,000,000 Bonds of the City of Watertown, Jefferson County, New York, to Pay the Cost of the Design and Installation of a New Parallel Transmission Main to the Thompson Park Reservoirs, in and for Said City

LOCAL LAW

PUBLIC HEARING

OLD BUSINESS

Tabled - Resolution Approving Third Amendment to 2012-13 Franchise Agreement, 1000 Islands Privateers Professional Hockey Team, LLC

STAFF REPORTS

1. Elevated Water Storage Tank at Thompson Park
2. Transportation Commission Vacancy
3. Board and Commission Appointments
4. Letter from Community Action Planning Council of Jefferson County, Inc.
5. Jefferson Community College New Events Center Feasibility Study

NEW BUSINESS

EXECUTIVE SESSION

WORK SESSION

Next Work Session is scheduled for Monday, March 11, 2013, at 7:00 p.m.

ADJOURNMENT

NEXT REGULARLY SCHEDULED CITY COUNCIL MEETING IS MONDAY, MARCH 18, 2012.

Res No. 1

February 28, 2013

To: The Honorable Mayor and City Council

From: Elliott B. Nelson, Confidential Assistant to the City Manager

Subject: Authorizing Application for New York State Division of Homeland Security Grant, Fire Department

The City Fire Department is seeking Council approval to apply for a grant from the New York State Division of Homeland Security. This funding opportunity is in the amount of $138,876 and does not require any matching funds from the City. If approved, this grant will allow the Fire Department to purchase Swift Water Rescue Equipment, provide training for the equipment, and cover the personnel costs incurred as a result of the training. The specifics of this grant are detailed in the attached report from Fire Chief Dale C. Herman.

The Swift Water Rescue equipment funded through this grant opportunity will provide the Watertown Fire Department with equipment to outfit a five-person squad with capability to respond to a water rescue situation. While Jefferson County does have a team capable of responding to water rescue incidents, the City has the response capability to rapidly advance upon a rescue scene and dramatically increase the chance that a victim will be recovered before suffering serious injury or death. In contrast with the Jefferson County Water Rescue Team, the City of Watertown maintains all water rescue equipment in a central location, ready to deploy at a moment's notice, thus increasing response time. While the County may possess similar equipment purchased under this grant opportunity, the Fire Department maintains its own water rescue equipment in order to expediently respond to water rescue calls.

A resolution is attached for Council consideration authorizing Chief Herman to sign and submit the grant application on behalf of the City of Watertown by March 6, 2013. City staff will be available to answer any questions Council may have related to this grant opportunity.

Resolution No. 1

March 4, 2013

RESOLUTION

Authorizing Application for NYS Division of Homeland Security and Emergency Services Grant, Fire Department

	YEA	NAY
Council Member BURNS, Roxanne M.		
Council Member BUTLER, Joseph M. Jr.		
Council Member MACALUSO, Teresa R.		
Council Member SMITH, Jeffrey M.		
Mayor GRAHAM, Jeffrey E.		
Total		

Introduced by

_____

WHEREAS the New York State Division of Homeland Security and Emergency Services (DHSES) is accepting applications for funding through March 6, and

WHEREAS the City of Watertown Fire Department has prepared an application that meets the intended purpose of this grant, which will allow the Department to purchase Swift Water Rescue equipment, provide training with said equipment, and offset personnel and overtime costs related to this training, and

WHEREAS the application, in the amount of $138,876, does not require any matching funds from the City,

NOW THEREFORE BE IT RESOLVED that the City Council of the City of Watertown hereby authorizes the Fire Department to submit a grant application in the amount of $138,876 to the New York State Division of Homeland Security and Emergency Services, and

BE IT FURTHER RESOLVED that Fire Chief Dale C. Herman is hereby authorized and directed to execute the grant application on behalf of the City of Watertown.

Seconded by

CITY OF WATERTOWN, NEW YORK
FIRE DEPARTMENT
224 South Massey Street
Watertown, New York 13601
(315) 785-7800
Fax: (315) 785-7821
Dale C. Herman, Fire Chief
dherman@watertown-ny.gov

February 28, 2013

Ms. Sharon Addison
City Manager
City of Watertown
245 Washington Street
Watertown, New York 13601

Dear Sharon:

The New York State Division of Homeland Security and Emergency Services have made $1,000,000 available for the 2012 Technical Rescue and Urban Search and Rescue grant program. The objective of this grant program is to strengthen State and local Rescue Team capabilities through training and equipment acquisition activities. The City of Watertown Fire Department is requesting authorization to apply for this no match grant to fund the following resources:

- $70,453 in equipment to meet a Type III Swift Water Rescue Team. Equipment includes such items as dry suits, PFD, stokes basket w/floatation, night vision goggles, inflatable boat w/ motor and other equipment items associated with Type III Swift Water Response Team (see attachments).
- $65,323 in personnel costs to cover overtime and backfill for training. These funds will be utilized to cover the cost of personnel attending class, as they will not be able to respond to incidents while participating in class. It is an estimated need for 1,584 hours to allow 18 personnel, who are not certified as rescue swimmers to participate in a 32 hour Rescue Swimmers Class, and 38 individuals to be certified as boat operators in a

24 hours Boat Operators Class, and 4 individuals to attend a 24 hour Animal Rescue Class

- $3,100 in training costs for Rescue Swimmers, boat operations and Animal water rescue courses. This is the cost associated with student registration fees to attend training classes.

Total funding being sought is $138,876

The Fire Department has utilized its water rescue capabilities at local, regional and statewide incidents. This grant would allow the continuation of this response resource by training personnel who are not certified in water rescue, acquiring equipment essential to responder safety and well being, and meet a resource typing category which is recognized based on capabilities.

If you have any questions, please do not hesitate to contact me.

Truly yours,

CITY OF WATERTOWN FIRE DEPARTMENT

Dale C. Herman

Dale C. Herman
Fire Chief

DCH:cdb
Attachment
cc: James Mill, City Comptroller

ITEMS NEEDED	Type II	Type III	Extra	Vendor	Model #	Description	List Price	JFE Pricing	Type II Extension	Type III Extension	Type II W/Extra	Type III W/Extra
PPE												
PFD Type V*	9	1		RNR	I650	Stearns Versatile Rescue Vest	$204.00		$1,836.00	$204.00	$1,836.00	$204.00
PFD Type III (Victims)			2	RNR	I2001	STEARNS General Purpose Vest	$32.25		$0.00	$0.00	$64.50	$64.50
Dry Suit	7	5		RNR	2251.5-X	NRS Extreme SAR Drysuit	$844.95		$5,914.65	$4,224.75	$5,914.65	$4,224.75
Dry Suit Fleece Liner	2	0		Rescue Source	DS1900	Power Dry Drysuit Liner	$129.95		$259.90	$0.00	$259.90	$0.00
Helmet*	5	0		RNR	42605	NRS Chaos	$49.95		$249.75	$0.00	$249.75	$0.00
Water Rescue Gloves	0	0	5	Rescue Source	GL8910	RQ3 Max Wear	$34.95		$0.00	$0.00	$174.75	$174.75
Water PPE Gear Bags	14	5		Rescue Source	BG3085L	Mesh Duffel - Large	$34.95		$489.30	$174.75	$489.30	$174.75
Small Mesh Storage Bags			10	RNR	WHBXX	R-N-R, Mesh Stuff Sack	$10.05		$0.00	$0.00	$100.50	$100.50
Whistle*	14	5	6	RNR	FOX40C	Fox 40	$6.99		$97.86	$34.95	$139.80	$76.89
Headlamp	12	2		RNR	E78CHB	Petzl Pixa 3	$74.95		$899.40	$149.90	$899.40	$149.90
Water Rescue Knife	14	5	8	RNR	KN2557B	Gerber River Shorty	$32.95		$461.30	$164.75	$724.90	$428.35
Retractable Tether	14	5	8	RNR	RT2-4422	Gear Keeper Flashlight Keeper	$24.99		$349.86	$124.95	$549.78	$324.87
Survival Strobe Light	14	5	8	Rescue Source	SD7630	Firefly 3 Rescue Strobe	$69.99		$979.86	$349.95	$1,539.78	$909.87
Smoke Signal (Optional)	14	5							$0.00	$0.00	$0.00	$0.00
Handheld Emergency Flare (Optional)	14	5							$0.00	$0.00	$0.00	$0.00
Aerial Signal Flare (Optional)	14	5							$0.00	$0.00	$0.00	$0.00
Sea Dye Marker (Optional)	14	5	8	Rescue Source	SD7525	Leakproof Dye Marker	$16.99		$237.86	$84.95	$373.78	$220.87
Waders/Hip Boots	14	5		La Fargeville Agway	RTK8	River Trekker Hipper	$149.99		$2,099.86	$749.95	$2,099.86	$749.95
Swim Fins	5	0		RNR	1897		$59.95		$299.75	$0.00	$299.75	$0.00
Dry Bag/ Gear Bag	14	5		NRS	29731	NRS Hydrolock Dry Bag	$32.95		$461.30	$164.75	$461.30	$164.75
Window Punch, Spring type	14	5	8	EMP	71234	EMI Window Punch	$6.59		$92.26	$32.95	$144.98	$85.67
Ice Awl (pair)			2	RNR	POL-1	ANGEL GUARD, Pick-of-Life	$20.95		$0.00	$0.00	$41.90	$41.90
									$0.00	$0.00	$0.00	$0.00
MEDICAL									$0.00	$0.00	$0.00	$0.00
ALS Support Medical Kit	1	0	1	EMP	MS-B3310	Medsource O2 Bag	$93.99		$93.99	$0.00	$187.98	$93.99
Floating Spine Board*	2	1		EMP	700	LSP Miller Board	$698.95		$1,397.90	$698.95	$1,397.90	$698.95
Stokes Basket	2	1		RNR	SAF-200	Junkin Plastic Stokes	$649.00		$1,298.00	$649.00	$1,298.00	$649.00
Stokes Basket Float Kit	2	1		RNR	SAF-303	Junkin Stokes Floatation Collar	$398.00		$796.00	$398.00	$796.00	$398.00
Hypothermia Wrap/ Heavy Blankets	1	1		EMP	C-3	EMP Wool Blend Blanket	$17.29		$17.29	$17.29	$17.29	$17.29
Emergency Blankets	6	2		EMP	B-502	Emergency Blankets (Tray of 5)	$14.79		$88.74	$29.58	$88.74	$29.58
									$0.00	$0.00	$0.00	$0.00
COMMUNICATION/ NAVIGATION									$0.00	$0.00	$0.00	$0.00
Radio Headset	14	0		Wells Communications	PMLN5111A	IMPRES black 3-wire audio surveillance kit	$123.75		$1,732.50	$0.00	$1,732.50	$0.00
Handheld GPS Unit	4	2		Garmin	010-00924-00	Montana 600	$469.99		$1,879.96	$939.98	$1,879.96	$939.98
GPS Maps	4	2		Garmin		City Navigator® North America NT / Birds Eye Satellite Imagery	$150.00		$600.00	$300.00	$600.00	$300.00
GPS Accessories	4	2				Dry Bag, Vehicle Mount, Charger	$100.00		$400.00	$200.00	$400.00	$200.00
Aircraft Band Radio	4	1		Wells Communications		Icom Air Band Avonics Portable Radio Kit (Radio,Battery,Antenna,Charger)	$399.00		$1,596.00	$399.00	$1,596.00	$399.00
Night Vision Goggles	2	2		American Tech. Corp.	ATN PS15-WPT	Night Vision Goggles w/Universal Helmet Mount Kit	$5,581.00		$11,162.00	$11,162.00	$11,162.00	$11,162.00
									$0.00	$0.00	$0.00	$0.00
WATERCRAFT									$0.00	$0.00	$0.00	$0.00
Paddles	1	0		NRS	1515 / 75010.01	Carlisle Outfitter Paddle - 60" Yellow/Blue	$47.95		$47.95	$0.00	$47.95	$0.00
									$0.00	$0.00	$0.00	$0.00
BOAT EQUIPMENT KIT									$0.00	$0.00	$0.00	$0.00
Boat equipment Bag	2	1		Rescue Source	BG3195	RQ3 Heavy Duty Equipment Bag	$59.00		$118.00	$59.00	$118.00	$59.00
Fire Extinguisher	2	1		Jerome Fire Equipment		20# ABC W/Vehicle Mount	$163.50		$327.00	$163.50	$327.00	$163.50
Air horn	2	1		West Marine	533786	Falcon Portable Supersound Signal Horn	$11.99		$23.98	$11.99	$23.98	$11.99
Handheld Signal Flare	2	1		West Marine	8665770	Orion Handheld Red Locator Flares (4 pack)	$31.99		$63.98	$31.99	$63.98	$31.99
Aerial Flare Kit	2	1		West Marine	6997688	Orion 12-Gauge High-Performance Alert/Locate Plus Signal Kit	$139.99		$279.98	$139.99	$279.98	$139.99
Smoke Signal Device	2	1				See Above			$0.00	$0.00	$0.00	$0.00
Anchor	2	1		West Marine	7847163	Mushroom Anchor, 8lb., Black	$28.99		$57.98	$28.99	$57.98	$28.99
Anchor Line	2	1		West Marine	5529060	3/8" Premium Anchor Line, 100'	$54.99		$109.98	$54.99	$109.98	$54.99
Navigation Lights	2	1		Bixler Marine		Mag Mount Navigation Lights (Front/Rear)	$128.00		$256.00	$128.00	$256.00	$128.00
First Aid Kit	2	1				See EMS Kit			$0.00	$0.00	$0.00	$0.00
Throwable PFD	2	1		West Marine	RC3500	Rescue Tube	$59.95		$119.90	$59.95	$119.90	$59.95
Extra Mooring Lines	2	1		West Marine	5528435	3/8" Dia. Dock Line, 15' Length, black	$22.99		$45.98	$22.99	$45.98	$22.99
Throw Bag 60 Ft	2	0		NRS	1823 / 45102.01	NRS Pro Rescue Throw Bag	$119.95		$239.90	$0.00	$239.90	$0.00
Emergency Blankets	8	4				See Medical Kit			$0.00	$0.00	$0.00	$0.00
Boat Hook, Telescoping	2	1		West Marine	386195	Telescoping Paddle/Boat Hook	$34.99		$69.98	$34.99	$69.98	$34.99
Compass	2	1		NRS	7441 / 71758.01	Brunton 26DNL Handheld Mirrored Compass	$22.00		$44.00	$22.00	$44.00	$22.00
Boat Repair Kit			2	Bixlers Marine	BIX580BK	Hypalon Inflatable Boat Repair Kit - XL	$81.95		$0.00	$0.00	$163.90	$163.90
Funnel Assortment			1	AutoZone		Funnels	$10.00		$0.00	$0.00	$10.00	$10.00
Spare Zodiac Inflation Caps			1	Firefighter 1	Z2286	Replacement Zodiac Caps (5 Pack)	$160.00		$0.00	$0.00	$160.00	$160.00
Zodiac Inflation System			3	Firefighter 1	Z2292	Zodiac Inflation System	$800.00		$0.00	$0.00	$2,400.00	$2,400.00
Outboard Motor Hand Truck			4	Home Depot	60610	Milwaukee 600 lb. Capacity Hand Truck	$64.97		$0.00	$0.00	$259.88	$259.88
									$0.00	$0.00	$0.00	$0.00
BASE OF OPERATIONS EQUIPMENT									$0.00	$0.00	$0.00	$0.00
Admin Paperwork Kit	1	1							$0.00	$0.00	$0.00	$0.00
MREs	240	80		SurvivalSupply.com	WF120	MRE	$2.16		$518.40	$172.80	$518.40	$172.80
Bottled Water, Cases	42	15		Kinney's		24 Pack Case	$5.00		$210.00	$75.00	$210.00	$75.00
Sleeping Bags	14	5		Walmart		Everest Mummy 5 Degree Bag	$24.86		$348.04	$124.30	$348.04	$124.30
Sleeping Mat/ Cot	14	5		Walmart		Coleman Trailhead Military Style	$39.00		$546.00	$195.00	$546.00	$195.00
Hand Sanitizer	30	15		Kinney's		Personal Size	$5.00		$150.00	$75.00	$150.00	$75.00
Water Filter	1	1		Rei.com	695265	MSR Mini Works EX	$89.95		$89.95	$89.95	$89.95	$89.95
Insect Repellent	14	5		Kinney's		Insect Repellent	$2.00		$28.00	$10.00	$28.00	$10.00

Sunscreen	14	5		Kinney's		Suncreen	$2.00		$28.00	$10.00	$28.00	$10.00
Hot Knife	1	1		RNR	S6801	Hand Held Hot Knife	$57.50		$57.50	$57.50	$57.50	$57.50
Fan 18"	2	1		Lowes	333651	Lasko 18-in 3-Speed Oscillating Stand Fn	$29.68		$59.36	$29.68	$59.36	$29.68
Chem Lights, Green	2	1	1	Cyalume	Jerome Fire Equipment	6" Snaplights - Case of 100	$79.95		$159.90	$79.95	$239.85	$159.90
Chem Lights, Red	2	1	1	Cyalume	Jerome Fire Equipment	6" Snaplights - Case of 100	$79.95		$159.90	$79.95	$239.85	$159.90
Chem Lights, Yellow	2	1		Cyalume	Jerome Fire Equipment	6" Snaplights - Case of 100	$79.95		$159.90	$79.95	$159.90	$79.95
Chem Lights, Blue	2	1		Cyalume	Jerome Fire Equipment	6" Snaplights - Case of 100	$79.95		$159.90	$79.95	$159.90	$79.95
Personal Marker Lights			1	Cyalume		50 pack case	$228.50		$0.00	$0.00	$228.50	$228.50
Dry Suit Repair Kit	14	5		NRS	2268/33602.01	Kokatat Repair Kit	$40.00		$560.00	$200.00	$560.00	$200.00
Portable Toilet	2	1		Overtons	80536	SeaLand 962 Portable Toilet	$100.00		$200.00	$100.00	$200.00	$100.00
									$0.00	$0.00	$0.00	$0.00
S&R EQUIPMENT									$0.00	$0.00	$0.00	$0.00
Parabuckle Net	2	1		RNR	1800	NRS, Rescue Cargo Net	$59.95		$119.90	$59.95	$119.90	$59.95
Flagging Tape	14	5		Lowes		Presco 1"x600' Flagging Tape	$3.98		$55.72	$19.90	$55.72	$19.90
Line Gun Line			4	RNR	NL114-O	NAVAL COMPANY, Nylon Shot Line	$49.90		$0.00	$0.00	$199.60	$199.60
Portable PA System	1	0		Galls		Deluxe Street Thunder Megaphone	$92.99		$92.99	$0.00	$92.99	$0.00
Marine Binoculars	6	1	1	Overtons		ProMariner 7x50 Floating	$139.99		$839.94	$139.99	$979.93	$279.98
Boat Inflation Blower	1	0		Bixler Marine		Metro Magic 110V Inflator	$88.50		$19.99	$0.00	$19.99	$0.00
Grease Gun			1	Overtons		Star Brite 14 OZ. Grease Gun	$19.99					
Mechanics Tool Kit			1	Lowes		Kobalt 138 Piece Tool Kit	$179.97					
									$0.00	$0.00	$0.00	$0.00
ROPE RESCUE RIGGING EQUIPMENT									$0.00	$0.00	$0.00	$0.00
Knot Passing Pulley	2	2		RNR	P67	Petzl, Kootenay Knot Passing Pulley	$179.00		$358.00	$358.00	$358.00	$358.00
Pickets 1"x 5'	12	6		Jefferson Concrete		1" Rebar	$7.00		$84.00	$42.00	$84.00	$42.00
Victim Harness	4	2		RNR	WBBHDU	R-N-R, Universal Born Body Harness	$338.00		$1,352.00	$676.00	$1,352.00	$676.00
Gibbs Ascender			2	RNR	#2SS	GIBBS, 1/2" Stainless Steel Shell Ascender	$67.20		$0.00	$0.00	$134.40	$134.40
Rescue Rack	4	2		RNR	RRACKB1	CMI, 6 Bar U-Shaped Rack with Aluminum Top Bar	$89.40		$357.60	$178.80	$357.60	$178.80
Yellow Prussik Cord - 72"	100	100		RNR	1307-C0XX	PMI, 7 mm Accessory Cord	$0.49		$49.00	$49.00	$49.00	$49.00
Blue Prussik Cord - 60"	80	80		RNR	1307-C0XX	PMI, 7 mm Accessory Cord	$0.49		$39.20	$39.20	$39.20	$39.20
2" Sewn Anchor Straps			2	RNR	1.75CAS-48	R-N-R, 48" Heavy Duty Choker Anchor Strap	$49.00		$0.00	$0.00	$98.00	$98.00
1" Red Webbing	1	1		RNR	060101-300	1" Tubular Nylon Webbing 300' Spool	$108.50		$108.50	$108.50	$108.50	$108.50
1" Blue Webbing	1	1		RNR	060101-300	1" Tubular Nylon Webbing 300' Spool	$108.50		$108.50	$108.50	$108.50	$108.50
1" White Webbing	1	1		RNR	060101-300	1" Tubular Nylon Webbing 300' Spool	$108.50		$108.50	$108.50	$108.50	$108.50
Large Steel Carabiner	40	20		RNR	NFPA21001	SMC, Large Locking D Steel Carabiner NFPA	$33.50		$1,340.00	$670.00	$1,340.00	$670.00
X-Large Steel Carabiner			1	RNR	NFPA20003	SMC, XL Locking D Steel Carabiner NFPA	$39.80		$0.00	$0.00	$39.80	$39.80
Pick-Off Strap			1	RNR	WPOS	R-N-R, Pick-Off Strap	$30.00		$0.00	$0.00	$30.00	$30.00
540 Belay			2	RNR	16-0100	TRAVERSE, 540 Rescue Belay	$422.70		$0.00	$0.00	$845.40	$845.40
MARS System			1	RNR	RESCUE50-U	MARS-50	$652.00		$0.00	$0.00	$652.00	$652.00
USAR Hardware Bag			3	RNR	RATPACK	R-N-R, Rope Access Technicians Pack	$176.00		$0.00	$0.00	$528.00	$528.00
Figure 8 Plate	1			RNR	R-1000	CMI, Rescue Figure 8 With Ears	$48.25		$48.25	$0.00	$48.25	$0.00
4" Rescue Pulley - Steel	12	12		RNR	NFPA158000	SMC, 3" x 1/2" Single Prusik Minding Pulley	$84.30		$1,011.60	$1,011.60	$1,011.60	$1,011.60
Anchor Plate	1	1		RNR	RIGPLATE2	CMI, Small Stainless Steel Rigging Plate	$75.00		$75.00	$75.00	$75.00	$75.00
1/2" Static Kernmantle 300'	7	3		RNR	SSS127X-300	STERLING, 1/2" (13 mm) Superstatic2 300'	$381.05		$2,667.35	$1,143.15	$2,667.35	$1,143.15
1/2" Static Kernmantle 600'	1	1		RNR	SSS127X-600	STERLING, 1/2" (13 mm) Superstatic2 600'	$750.20		$750.20	$750.20	$750.20	$750.20
Class 2/3 Rescue Harnesses	14	2		RNR	WURHX	Ultimate Rescue Harness	$301.00		$4,214.00	$602.00	$4,214.00	$602.00
									$54,830.99	$29,612.10	$62,610.02	$37,391.13

ITEMS NEEDED	Type II	Type III	Extra	Vendor	Model #	Description	List Price
24' Trailer			1	A Plus Auto Care	Sure-Trac STBNCH	24', 10000# Enclosed Trailer	$9,580.00
Shelving							$500.00
Lettering							$1,500.00
Rigid Inflatable Boat			1	Firefighter 1	FC 420	13' 9"	$14,971.30
Outboard Motor			1	Chalks	E30DP	30 HP Evinrude E-Tec w/Rescue Pro	$6,509.00
							$33,060.30

Res. No. 2

February 28, 2013

To: The Honorable Mayor and City Council

From: Elliott B. Nelson, Confidential Assistant to the City Manager

Subject: Flynn and Alteri Swimming Pool Project; Supplemental Construction Inspection Services Agreement, C & S Engineers

At the Regular Meeting of August 6, 2012, the City Council approved a Construction Inspection Services Agreement with C & S Engineers, Inc. in the amount of $11,876.40 for work related to the Alteri and Flynn Pool resurfacing projects. Since that time, C & S Engineering has submitted a Supplemental Agreement for Construction Inspection Services in an amount not to exceed $10,737.60. If approved by Council, the total amount of the agreement would stand at $36,814.

As indicated in the Attached memorandum from Justin Wood, Civil Engineer II, the supplemental work preformed by C & S Engineers was necessary for several reasons. Additional work was required to evaluate cover options for the Alteri Pool, to extend the construction contract with the firm retained by the City to perform the resurfacing project, and to devise a strategy to deal with rusty water resulting from antiquated plumbing at the Alteri Pool. These tasks resulted in significant out of scope work for C & S Engineers and has necessitated this Supplemental Inspection Service Agreement.

Work is scheduled to resume on both pools this spring, with a target completion date of May 31.

A supplemental appropriation for the Fiscal Year 2012-13 General Fund Budget to cover this Supplemental Agreement has been prepared for City Council consideration later in tonight's agenda.

Staff will be available to answer any questions Council may have regarding this legislation.

Resolution No. 2

March 4, 2013

RESOLUTION

Approving Supplemental Agreement for Construction Inspection Services, Watertown Swimming Pools Resurfacing Project, C&S Engineers, Inc.

	YEA	NAY
Council Member BURNS, Roxanne M.		
Council Member BUTLER, Joseph M. Jr.		
Council Member MACALUSO, Teresa R.		
Council Member SMITH, Jeffrey M.		
Mayor GRAHAM, Jeffrey E.		
Total		

Introduced by

_____

WHEREAS City Council wishes to move forward with the construction phase of the resurfacing of the Flynn and Alteri Pools, and

WHEREAS C & S Engineers, Inc. has provided a Construction Phase Services Agreement to provide services such as submittal and shop drawing reviews, project coordination, and construction inspection during the pool renovations on an hourly basis, and

WHEREAS on August 6, 2012 the City Council of the City of Watertown approved the Construction Phase Services Agreement with C & S Engineers, Inc. for the resurfacing of the Flynn and Alteri pools on an hourly basis estimated to be $11, 876.40, and

WHEREAS C & S Engineers, Inc has submitted to the City a Supplemental Agreement for Construction Inspection Services in an amount not to exceed $10,737.60 for unforeseen issues related to the Alteri and Flynn pool resurfacing projects as well as out of scope services,

NOW THEREFORE BE IT RESOLVED that the City Council of the City of Watertown hereby approves the Supplemental Agreement for Construction Inspection Services with C & S Engineers, Inc. for the resurfacing of Flynn and Alteri pools in an amount not to exceed $10,737.60, a copy of which is attached and made part of this resolution, and

BE IT FURTHER RESOLVED that the City Manager, Sharon Addison, is hereby authorized and directed to execute the Agreement on behalf of the City of Watertown.

Seconded by

C&S Companies
499 Col. Eileen Collins Blvd.
Syracuse, NY 13212
p: (315) 455-2000
f: (315) 455-9667
www.cscos.com

February 14, 2013

CITY ENGINEERING DEPT.
RECEIVED
FEB 21 2013
WATERTOWN, NEW YORK

Ms. Erin Gardner, Superintendent of Parks and Recreation
City of Watertown
William T. Field Drive
Watertown, New York 13601

Re: Professional Engineering Services for
Watertown Swimming Pool Resurfacing Project
Construction Observation Phase Agreement
Project No. 129-101-002

Dear Ms. Gardner:

We are pleased to submit this proposal to provide professional engineering services in connection with the Construction Phase of the Watertown Swimming Pool Resurfacing Project (herein called the "Project"). Our basic services will consist of Submittal and Shop Drawing Review, Scheduling, Pre-construction and Project Meetings, Construction Observation, Generation of Punch List Items, Final Walk Through and Construction Estimates.

The specific scope of work is set forth in Exhibit "A" entitled "Scope of Professional Engineering Services Construction Observation Phase Watertown Swimming Pool Resurfacing Project". We request that you furnish us with any additional information relating to your Project requirements not currently identified, including any special extraordinary considerations or any special services you may require. Additionally, we ask that you make available all pertinent data and other information necessary for the performance of our services and upon which we may rely.

In exchange for performance of our Professional Engineering Services identified in Exhibit "A" you agree to pay us a not-to- exceed cost of $10,737.60.

In addition to the Professional Engineering Services as set forth in Exhibit "A", we also propose at this time to perform any Additional Services as may be requested by you in writing during the life of this Project. In Exchange for Additional Services we may perform, you agree to pay us on the basis of salary costs times a factor of 2.2. Reimbursable Expenses incurred by us in connection with all Basic and any Additional Services, which may be requested, will be charged on the basis of actual cost.

The terms and conditions governing the performance and payment of our servicers proposed herein, including respective responsibilities and other pertinent matters are set forth in the enclosed printed "Terms and Conditions (Construction Phase), attached hereto as Exhibit "B".

This proposal, together with attached Exhibits "A", and "B" constitutes the entire agreement between us in respect of the Project and may only be modified by writing executed by both parties. If this proposal, together with its governing terms and conditions, including our Limitations of Liability, description of services to be rendered and fee schedule set forth herein meet with your approval, kindly acknowledge the same on the line indicated below, retain one copy for your records and return one copy to our office. This proposal will become an agreement upon your acceptance, either acknowledged to below or conveyed orally. Your acceptance will constitute authorization to proceed on this project. This proposal will remain open for acceptance until April 30, 2013, unless modified by us in writing.

Very truly yours,

C&S ENGINEERS, Inc.

Douglas R. Wickman, P.E.
Principal

C&S ENGINEERS, Inc.

Marcus J. Malley
Project Engineer

/mjm
Enclosures

ACCEPTED THIS _____DAY OF

_____, 2013

By: _____
Authorized Representative

Title: _____

EXHIBIT A

SCOPE OF PROFESSIONAL SERVICES

CONSTRUCTION OBSERVATION PHASE

WATERTOWN SWIMMING POOL RESURFACING PROJECT

CITY OF WATERTOWN, NEW YORK

OWNER: City of Watertown

ENGINEER: C&S Engineers Inc.

A. ENGINEER shall review the required submittals, shop drawings, project schedule and construction estimates. Cost may vary depending on the number of Contractors involved, submittal or shop drawing quantity, quality and completeness, and the speed of contractor during the above processes.

B. ENGINEER shall schedule and attend two preconstruction meetings, one at each project site.

C. ENGINEER shall provide final review of materials and submittals, payment requests and close out of the Contract for the Alteri Pool.

D. ENGINEER shall provide Submittal Reviews, Warrantee and Insurance Review, Payment requests and Final Payment requests for the Flynn Pool.

E. ENGINEER shall make three site visits, with each visit taking four hours, including travel, for the Alteri Pool.

F. ENGINEER shall make twelve site visits, with each visit taking four hours, including travel, for the Flynn Pool.

G. ENGINEER shall attend three one-hour meetings with City of Watertown Officials for the Flynn Pool, during the scheduled site visits.

H. ENGINEER shall attend two one-hour meetings with City of Watertown Officials for the Alteri Pool during the scheduled site visits.

I. ENGINEER shall attend one City of Watertown Council Meeting to close out the Contract for both pools and answer any questions.

J. ENGINEER shall provide for one full (8 hour) day for the punch list generation and final walk through for both pools, project close out and release of retainage.

Additionally, it is our understanding that the city will utilize the services of a testing laboratory of their choice, if required, for testing of the plaster or concrete materials and workmanship performed by the contractor as required and in accordance with the Contract Documents. Our services include coordination with the testing laboratory as we proceed with the Project. The City of Watertown shall be responsible for all other costs associated with the laboratory testing.

END OF EXHIBIT A

EXHIBIT "B"
TERMS & CONDITIONS (Construction Phase)

These Terms and Conditions govern the performance by or through Engineer of the Scope of Services set forth in the letter part of this Agreement. Capitalized terms used herein, unless otherwise defined, shall have the meanings ascribed thereto in the letter and/or scope of services. Owner and Engineer agree as follows:

1.01 Basic Agreement

A. , Engineer shall provide, or cause to be provided, the services set forth in the letter part of this Agreement, and Owner shall pay Engineer for such Services as set forth in the letter part of this Agreement.

2.01 Payment Procedures

A. *Terms of Payment.* Refer to the letter part of this Agreement between Owner and Engineer for the method of payment to Engineer.

B. *Preparation of Invoices.* Engineer will prepare a monthly invoice in accordance with Engineer's standard invoicing practices and submit the invoice to Owner.

C. *Payment of Invoices.* Invoices are due and payable within 30 days of receipt. If Owner fails to make any payment due Engineer for services and expenses within 30 days after receipt of Engineer's invoice, the amounts due Engineer will be increased at the rate of 1.5% per month (or the maximum rate of interest permitted by law, if less) from said thirtieth day. In addition, Engineer may, without liability, after giving seven days written notice to Owner, suspend services under this Agreement until Engineer has been paid in full all amounts due for services, expenses, and other related charges. Payments will be credited first to interest and then to principal. In addition, Owner agrees to pay all expenses incurred by Engineer as a result of Owner's failure to fulfill its obligations under this Agreement, including but not limited to, costs, disbursements, and attorney's fees.

D. *Payment upon Termination.* In the event of termination of Engineer's services by Owner, Engineer will be paid for Basic Services rendered to date of termination in accordance with the method of payment defined in the letter part of this Agreement except that under the lump sum method, the adjusted fee shall be determined by proportioning the stipulated amount to reflect the percentage of completion of the Project, as mutually agreed to by Owner and Engineer. Engineer will also be paid for additional services rendered to date of termination in accordance with the method of payment defined in the letter part of this Agreement.

3.01 Additional Services

A. If authorized by Owner, or if required because of changes in the Project, Engineer shall furnish services in addition to those set forth in the letter part of this Agreement.

B. Owner shall pay Engineer for such additional services as follows: For additional services of Engineer's employees engaged directly on the Project an amount equal to the cumulative hours charged to the Project by each class of Engineer's employees times standard hourly rates for each applicable billing class; plus reimbursable expenses and Engineer's consultants' charges, if any.

4.01 Owner's Responsibilities

Owner shall perform the following in a timely manner so as not to delay the services of Engineer under this Agreement. Owner shall be responsible for, and Engineer may rely upon, the accuracy and completeness of all reports, data and other information furnished pursuant to this paragraph. Engineer may use such reports, data and information in performing or furnishing services under this Agreement.

A. Designate in writing a person to act as Owner's representative with respect to the services to be rendered under this Agreement. Such person shall have complete authority to transmit instructions, receive information, interpret and define Owner's policies and decisions with respect to Engineer's services for the Project. Engineer shall not rely on directions from anyone outside the scope of that person's authority as set forth in written delegations. Directions and decisions made by the Owner's representatives shall be binding on the Owner.

B. Assist Engineer by placing at Engineer's disposal all available information pertinent to the Project including previous reports and any other data relative to design or construction of the Project.

C. Advise Engineer of the identity and scope of services of any independent consultants employed by Owner to perform or furnish services in regard to the Project, including, but not limited to, Construction Management, Cost Estimating, Project Peer Review, Value Engineering, and Constructability Review.

D. Furnish to Engineer, as required for performance of Engineer's Basic Services (except to the extent provided otherwise in Section 1.01) the following:

1. Data prepared by or services of others including, without limitation, borings, probings, subsurface explorations and hydrographic surveys at or contiguous to the site, laboratory tests and inspections of samples, materials, and equipment.

2. Appropriate professional interpretations of all of the foregoing;

3. Other special data or consultations; all of which Engineer may use and rely upon in performing services under this Agreement.

E. Provide engineering surveys to establish reference points for construction (except to the extent provided in Section 1.01.)

F. Provide such accounting, independent cost estimating and insurance counseling services as may be required for the Project; such legal services as Owner may require or Engineer may reasonably request with regard to legal issues pertaining to the Project including any that may be raised by Contractor(s); such auditing service as Owner may require to ascertain that Contractor(s) are complying with any law, rule, regulation, ordinance, code or order applicable to their furnishing and performing the work.

G. If Owner designates a person to represent Owner at the site who is not Engineer or Engineer's agent or employee, the duties, responsibilities and limitations of authority of such other person and the affect thereof on the duties and responsibilities of Engineer and the Resident Project Representative (and any assistants) will be set forth in an exhibit that is to be identified, attached to, and made a part of this Agreement before such services begin.

H. If more than one prime contract is to be awarded for construction, materials, equipment and services for the entire Project, designate a person or organization to have authority and responsibility for coordinating the activities among the various prime contractors.

I. Attend the pre-bid conference, bid opening, preconstruction conferences, construction progress and other job-related meetings; and substantial completion inspections and final payment inspections.

J. Give prompt written notice to Engineer whenever Owner observes or otherwise becomes aware of any constituent of concern or any development that affects the scope or timing of Engineer's services, or any defect or non-conformance in the work of any Contractor.

Portions of this document have been taken from EJCDC E-520 Short Form Agreement Between Owner and Engineer for Professional Services
Copyright© 2002 National Society for Professional Engineers for EJCDC. All rights reserved.

EXHIBIT "B"
TERMS & CONDITIONS (Construction Phase)

K. Furnish, or direct Engineer to provide, Additional Services as stipulated in Section 3.01.

L. Require Contractor(s) to name Engineer as an additional insured on all Contractor's Liability Insurance Policies.

M. Provide services of an independent testing laboratory to perform all inspections, test and approvals of samples, materials, and equipment required by the Contract Documents, or to evaluate the performance of materials, equipment, and facilities of Owner prior to their incorporation into the Work with appropriate professional interpretation thereof.

N. Inform Engineer in writing of any specific requirements of safety or security programs that are applicable to Engineer, as a visitor to the Site.

O. Except as provided in paragraph K, bear all costs incident to compliance with the requirements of this Section 4.01.

5.01 Termination

A. The obligation to provide further services under this Agreement may be terminated:

1. For cause,

a. By either party upon 30 days written notice in the event of substantial failure by the other party to perform in accordance with the Agreement's terms through no fault of the terminating party.

b. By Engineer:

1) upon seven days written notice if Engineer believes that Engineer is being requested by Owner to furnish or perform services contrary to Engineer's responsibilities as a licensed professional; or

2) upon seven days written notice if the Engineer's services for the Project are delayed or suspended for more than 90 days for reasons beyond Engineer's control.

3) Engineer shall have no liability to Owner on account of such termination.

c. Notwithstanding the foregoing, this Agreement will not terminate as a result of a substantial failure under paragraph 5.01.A.1.a if the party receiving such notice begins, within seven days of receipt of such notice, to correct its failure and proceeds diligently to cure such failure within no more than 30 days of receipt of notice; provided, however, that if and to the extent such substantial failure cannot be reasonably cured within such 30 day period, and if such party has diligently attempted to cure the same and thereafter continues diligently to cure the same, then the cure period provided for herein shall extend up to, but in no case more than, 60 days after the date of receipt of the notice.

2. For convenience, by Owner effective upon the receipt of notice by Engineer.

B. The terminating party under paragraphs 5.01.A.1 or 5.01.A.2 may set the effective date of termination at a time up to 30 days later than otherwise provided to allow Engineer to demobilize personnel and equipment from the Project site, to complete tasks whose value would otherwise be lost, to prepare notes as to the status of completed and uncompleted tasks, and to assemble Project materials in orderly files.

6.01 Controlling Law

This Agreement is to be governed by the law of the state of New York without regard to any conflict of laws provisions, which may apply the laws of other jurisdictions. It is further agreed that any legal action between the Owner and Engineer arising out of this Agreement or the performance of the services shall be brought in a court of competent jurisdiction in Jefferson County, New York.

7.01 Successors, Assigns, and Beneficiaries

A. Owner and Engineer each is hereby bound and the partners, successors, executors, administrators, and legal representatives of Owner and Engineer (and to the extent permitted by paragraph 7.01.B the assigns of Owner and Engineer) are hereby bound to the other party to this Agreement and to the partners, successors, executors, administrators, and legal representatives (and said assigns) of such other party, in respect of all covenants, agreements, and obligations of this Agreement.

B. Neither Owner nor Engineer may assign, sublet, or transfer any rights under or interest (including, but without limitation, moneys that are due or may become due) in this Agreement without the written consent of the other, except to the extent that any assignment, subletting, or transfer is mandated or restricted by law. Unless specifically stated to the contrary in any written consent to an assignment, no assignment will release or discharge the assignor from any duty or responsibility under this Agreement.

8.01 General Considerations

A. The standard of care for all professional engineering and related services performed or furnished by Engineer under this Agreement will be the care and skill ordinarily used by members of the subject profession practicing under similar circumstances at the same time and in the same locality. Engineer makes no warranties, express or implied, under this Agreement or otherwise, in connection with Engineer's services. Engineer and its consultants may use or rely upon the design services of others, including, but not limited to, contractors, manufacturers, and suppliers.

B. Engineer shall not at any time supervise, direct, or have control over any contractor's work, nor shall Engineer have authority over or responsibility for the means, methods, techniques, sequences, or procedures of construction selected or used by any contractor, for safety precautions and programs incident to a contractor's work progress, nor for any failure of any contractor to comply with laws and regulations applicable to contractor's work.

C. Engineer neither guarantees the performance of any contractor nor assumes responsibility for any contractor's failure to furnish and perform its work in accordance with the contract between Owner and such contractor.

D. Engineer shall not be responsible for the acts or omissions of any contractor, subcontractor, or supplier, or of any contractor's agents or employees or any other persons (except Engineer's own employees) at the Project site or otherwise furnishing or performing any of construction work; or for any decision made on interpretations or clarifications of the construction contract given by Owner without consultation and advice of Engineer.

Portions of this document have been taken from EJCDC E-520 Short Form Agreement Between Owner and Engineer for Professional Services
Copyright© 2002 National Society for Professional Engineers for EJCDC. All rights reserved.

EXHIBIT "B"
TERMS & CONDITIONS (Construction Phase)

E. All documents prepared or furnished by Engineer are instruments of service, and Engineer retains an ownership and property interest (including the copyright and the right of reuse) in such documents, whether or not the Project is completed. Such documents are not intended or represented to be suitable for reuse by Owner or others in extensions of the facility beyond that now contemplated or on any other facility. Any reuse by Owner or others without specific written verification or adaptation by Engineer for the specific purpose intended will be at user's sole risk and without liability or legal exposure to Engineer, or to Engineer's independent professional associates or consultants, and Owner shall indemnify and hold harmless Engineer and Engineer's independent professional associates and consultants from all claims, losses, damages of any kind or nature, judgments, and expenses (including, but not limited to, reasonable attorney's fees and any costs), arising out of or resulting therefrom. Any such verification and adaptation will entitle Engineer to further compensation at rate to be agreed upon by Engineer and Owner.

F. Owner agrees that if Engineer was not employed to provide professional services during the Design Phase of the Project, Engineer will not be responsible for, and Owner shall indemnify, hold Engineer (and Engineer's professional associates and consultants) harmless, and defend Engineer from all claims, damages, losses and expenses including attorneys' fees arising out of, or resulting from the services performed during such phases. Nothing contained in this paragraph shall be construed to release Engineer (or Engineer's professional associates or consultants) from liability for failure to perform in accordance with professional standards any duty or responsibility which Engineer has undertaken or assumed under this Agreement.

G. To the fullest extent permitted by law, Owner and Engineer (1) waive against each other, and the other's employees, officers, directors, agents, insurers, partners, and consultants, any and all claims for or entitlement to special, incidental, indirect, or consequential damages arising out of, resulting from, or in any way related to the Project, and (2) agree that Engineer's (including Engineer's employees, officers, directors, agents and insurers, partners, and consultants) total liability to Owner under this Agreement shall be limited to $50,000 or the total amount of compensation received by Engineer, whichever is greater. The Owner may negotiate with the Engineer in the event the Owner wishes to change the total liability described herein but acknowledges that any change may result in an additional fee. This additional fee is in consideration of the greater risk involved in performing work for which there is an increase or no limitation of liability.

H. The parties acknowledge that Engineer's scope of services does not include any services related to a Hazardous Environmental Condition (the presence of asbestos, PCBs, petroleum, hazardous substances or waste, and radioactive materials). If Engineer or any other party encounters a Hazardous Environmental Condition, Engineer may, at its option and without liability for consequential or any other damages, suspend performance of services on the portion of the Project affected thereby until Owner: (i) retains appropriate specialist consultants or contractors to identify and, as appropriate, abate, remediate, or remove the Hazardous Environmental Condition; and (ii) warrants that the Site is in full compliance with applicable Laws and Regulations.

9.01 Period of Service

A. The specific schedule of services is more specifically described in the letter part of this Agreement or an exhibit thereto. The term of this agreement commences upon the acceptance of this Agreement (including all exhibits) by owner and terminates upon completion of the services described in the letter part of this Agreement.

B. The provisions of this Section 9.01 and the various rates of compensation for Engineer's services provided for elsewhere in this Agreement, have been agreed to in anticipation of the orderly and continuous progress of the Project through completion of the Construction Phase. If execution of this Agreement and authorization to proceed with the Bidding or Negotiating Phase is delayed beyond the date and time frame established in the letter part of the agreement, or if Engineer's services are delayed or suspended for more than three (3) months by Owner or for reasons beyond Engineer's control, all rates, measures and amounts of compensation provided herein shall be subject to equitable adjustment.

C. If Owner has requested significant modifications or changes in the general scope, extent or character of the Project, the time of performance of Engineer's services shall be adjusted equitably.

D. Any delay in or failure of performance of any party to this Agreement shall not constitute a default under this Agreement nor give rise to any claim for damage, if and to the extent such delay or failure is caused by occurrences or events beyond the control of the party affected, including but not limited to, acts of God; expropriation or confiscation of facilities or compliance with any order or request of government authority, affecting to a degree not presently existing, the supply, availability, or use of personnel or equipment; strikes; flood blizzard, labor unrest, riot; or any cause the affected party is unable to prevent or foresee with reasonable diligence. A party who is prevented from performing for any reason shall immediately notify the other in writing of the reason for the non-performance and the anticipated extent of any delay and its efforts to minimize the extent of delay and resume performance under this Agreement.

10.01 Opinions of Probable Cost

Since Engineer has no control over the cost of labor, materials, equipment or services furnished by others, or over the Contractor(s)' methods of determining prices, or over competitive bidding or market conditions, Engineer's opinions of probable Total Project Costs and Construction Cost provided for herein are to be made on the basis of Engineer's experience and qualifications and represent Engineer's best judgment as an experienced and qualified professional engineer, familiar with the construction industry; but Engineer cannot and does not guarantee that proposals, bids or actual Total Project or Construction Costs will not vary from opinions of probable cost prepared by Engineer. If prior to the Bidding or Negotiating Phase Owner wishes greater assurance as to Total Project or Construction Costs, Owner shall employ an independent cost estimator.

11.01 Dispute Resolution

A. Owner and Engineer agree to negotiate in good faith for a period of thirty (30) days from the date of notice of disputes between them as to the execution, meaning of, or performance under the terms of this Agreement prior to exercising their right under paragraph 11.01(B) below. The thirty-day period may be extended upon mutual agreement of the parties.

B. If any dispute cannot be resolved pursuant to paragraph 11.01(A) and only if mutually agreed by Owner and Engineer, said dispute and all unsettled claims, counterclaims and other matters in question between them arising out of or relating to the execution, meaning of, or performance under the terms of this Agreement or the breach thereof ("disputes") shall be submitted to mediation by a mediator, to be selected by the parties jointly, prior to initiating a legal action against the other, unless initiating mediation would irrevocably prejudice one of the parties. It is the intention of the parties that any agreement reached at mediation become binding upon them. The cost of mediation shall be shared equally between the parties.

C. This Section 11.01 shall survive any termination or cancellation of this Agreement.

Portions of this document have been taken from EJCDC E-520 Short Form Agreement Between Owner and Engineer for Professional Services
Copyright© 2002 National Society for Professional Engineers for EJCDC. All rights reserved.

EXHIBIT "B"
TERMS & CONDITIONS (Construction Phase)

12.01 Total Agreement/ Severability

This Agreement (consisting of the letter part of this Agreement, this Exhibit "A" and any additional exhibits referred to in the letter part of this Agreement), constitutes the entire agreement between Owner and Engineer and supersedes all prior written or oral understandings. This Agreement may only be amended, supplemented, modified, or canceled by a duly executed written instrument. Any provision or part of this Agreement held by a court of law to be invalid or unenforceable under any law or regulation shall be deemed stricken, and all remaining provisions shall continue to be valid and binding upon Owner and Engineer, who agree that the Agreement shall be reformed to replace such stricken provision or part therefore with a valid and enforceable provision that comes as close as possible to expressing the intention of the stricken provision.

Portions of this document have been taken from EJCDC E-520 Short Form Agreement Between Owner and Engineer for Professional Services
Copyright© 2002 National Society for Professional Engineers for EJCDC. All rights reserved.

1869

CITY OF WATERTOWN
ENGINEERING DEPARTMENT
MEMORANDUM

DATE: 27 February 2013

TO: Kurt Hauk, City Engineer

FROM: Justin Wood, Civil Engineer II JW

SUBJECT: Watertown Swimming Pool Resurfacing Project –
Construction Inspection Services Supplemental Agreement

C & S Engineers, Inc. was hired by the City to design and bid the resurfacing of the Alteri and Flynn Pools, via City Council approval of the Design Services Agreement for an amount of $14,200 on March 5, 2012. On August 6, 2012 City Council accepted the low bids and subsequently approved the original Construction Inspection Services Agreement with C & S Engineers, Inc. in the amount of $11,876.40. C & S Engineers has now submitted a Supplemental Agreement for Construction Inspection Services for an amount Not to Exceed $10,737.60, associated with unforeseen issues with the Alteri & Flynn Pools and out of scope services. This supplemental agreement brings the total agreement value to $36,814.00. C & S Engineers, Inc. will perform services such as submittal and shop drawing review, scheduling, pre-construction and project meetings, construction observation, and project close out for both the Alteri and Flynn Pools.

In the fall of 2012, Mid-America Pool Renovation, Inc. began demolition work to remove the existing marcite surface of the Alteri Pool. By the time removal of the existing surface was completed, weather was becoming an issue due to the falling leaves and cold temperatures. C & S Engineers, Inc. was asked by the City to evaluate different pool cover options which would minimize staining of the new surface from falling leaves if the project were to continue. The dropping temperatures, however, posed additional challenges to installing a solid, competent new surface. Due to the risks of staining the new surface and to ensure we get the best product possible, it was agreed upon to extend the contract times to May 2013. Although a new pool cover was not purchased at that time, in the long term it would serve the Parks and Recreation Department well to invest in such a product to save several days of manpower to clean and prep the pools for opening each season, and to help protect the new surface.

The additional time and effort performed by C & S Engineers, Inc. to evaluate the Alteri Pool for pool cover options, and to extend the contract times with Mid-America Pool Renovation, Inc. resulted in out of scope work amounting to $3,026.43. This out of scope fee was paid out of the original Construction Inspection Services Agreement. During construction, it was also found that the plumbing in the Alteri Pool was full of rusty water, which can result in permanent staining of the new surface. C & S Engineers has devised a strategy with the contractor to deal with this issue but it will result in extra

effort to execute properly, effort which is covered by the Supplementary Agreement. The same strategy will be employed at the Flynn Pool as well.

Work will resume on both pools this Spring with a target completion date of May 31, 2013. This will allow the Parks and Recreation Dept. to get the pools up and running by the middle of June, as is typically done. C & S Engineers, Inc. will have a representative on site during the critical stages of construction to ensure the surface rehabilitation is performed in accordance with the project plans and specifications. The Supplemental Agreement is a Not to Exceed contract and only the actual amount of hours spent will be billed. If both contractors resume work during the same time period, it will help reduce overall inspection costs for this project as well.

Cc: Erin Gardener, Superintendent of Parks and Recreation

Res. No. 3

February 27, 2013

To: The Honorable Mayor and City Council

From: James E. Mills, City Comptroller

Subject: Authorizing Supplemental Appropriations No. 3 for General Fund

The Fiscal Year 2011-12 Capital Budget included funding in the amount of $100,000 to resurface the Steven D. Alteri pool and the Fiscal Year 2012-13 Capital Budget included funding in the amount of $120,000 to resurface the William J. Flynn pool. On August 6, 2012 City Council approved an additional $35,000 of funding to cover the costs of the bids submitted by Mid-American Pool Renovation, Leisure Craft Pools and C & S Companies to renovate these two pools.

Earlier in tonight's agenda City Council was presented with a resolution to approve a supplemental agreement with C & S Companies in the amount of $10,738 for additional construction inspection services. If the agreement was approved then the combined estimated cost of these projects based upon the resurfacing bids as well as the design and construction services $262,914 or $7,914 over budget.

Accordingly if City Council approved the agreement then a supplemental appropriation should be also be considered to modify the Fiscal Year 2012-13 General Fund Budget to increase the appropriation for the Transfer to Capital Fund line item and decrease the Contingency line item by $8,000 to cover the shortfall.

March 4, 2013

RESOLUTION

	YEA	NAY
Council Member BURNS, Roxanne M.		
Council Member BUTLER, Joseph M. Jr.		
Council Member MACALUSO, Teresa R.		
Council Member SMITH, Jeffrey M.		
Mayor GRAHAM, Jeffrey E.		
Total		

Approving Supplemental Appropriation No. 3
For Fiscal Year 2012-13 for Various Accounts

Introduced by

_____

WHEREAS the Fiscal Year 2011-12 Capital Budget included funding in the amount of $100,000 to resurface the Steven D. Alteri pool and,

WHEREAS the Fiscal Year 2012-13 Capital Budget included funding in the amount of $120,000 to resurface the William J. Flynn pool and,

WHEREAS on August 6, 2012 City Council increased the funding for these projects by $35,000 to $255,000 and,

WHEREAS based on the current agreements with Mid-American Pool Renovation and Leisure Craft Pools for these two pool resurfacing projects as well as cost of the design and construction inspection services provided by C& S Companies the combined estimated cost of the projects is $252,176 and,

WHEREAS if on March 4, 2012 City Council approved the supplemental agreement with C & S Companies for an additional $10,738 for additional construction inspection services then a supplemental appropriation should be considered to modify the Fiscal Year 2012-13 General Fund Budget to increase the appropriation for the Transfer to Capital Fund line item,

NOW THEREFORE BE IT RESOLVED by the City Council of the City of Watertown, New York that the total amount of $8,000 is hereby transferred and appropriated from and to the following accounts of the listed funds for FY 2012-13:

A 1990.0430	Contingency	($ 8,000)
A 9950.0900	Transfer to Capital Fund	8,000
Total		$ -

March 4, 2013

RESOLUTION

Approving Supplemental Appropriation No. 3
For Fiscal Year 2012-13 for Various Accounts

	YEA	NAY
Council Member BURNS, Roxanne M.		
Council Member BUTLER, Joseph M. Jr.		
Council Member MACALUSO, Teresa R.		
Council Member SMITH, Jeffrey M.		
Mayor GRAHAM, Jeffrey E.		
Total		

Seconded by

Res No. 4

February 27, 2013

To: The Honorable Mayor and City Council

From: Sharon Addison, City Manager

Subject: Approving Amendment No. 1 to Professional Services Agreement, GHD Consulting Services LLC

City Council approved a Professional Services Agreement with GHD Consulting Services LLC at the April 2, 2012, Council Meeting to perform design services for the Reservoir Parallel Watermain Project in the amount of $35,900.

As detailed in the attached report from Justin Wood, Civil Engineer II, the detailed design has progressed and it became evident that the scope of work should be expanded at the reservoir tanks and a gravel vehicle maintenance corridor parallel to the watermains has also been added to the project. Amendment No. 1 to the Agreement includes an additional lump sum fee of $28,400 for the design services to incorporate these changes and an hourly based agreement of $30,000 for construction inspection services, bringing the total agreement fees to $94,300.

Funding for the entire project to include the estimated construction costs were included in the 2012-2013 budget through the issuance of a serial bond, also included in tonight's agenda. A resolution is attached for Council consideration.

Resolution No.4

March 4, 2013

RESOLUTION

Approving Amendment No. 1 to Professional Services Agreement, GHD Consulting Engineers LLC

	YEA	NAY
Council Member BURNS, Roxanne M.		
Council Member BUTLER, Joseph M. Jr.		
Council Member MACALUSO, Teresa R.		
Council Member SMITH, Jeffrey M.		
Mayor GRAHAM, Jeffrey E.		
Total		

Introduced by

_____

WHEREAS on April 2, 2012, the City Council of the City of Watertown approved the Professional Services Agreement with GHD Consulting Engineers LLC to perform design services for the Reservoir Parallel Watermain Project in the amount of $35,900, and

WHEREAS Amendment No. 1 results in an additional amount of $58,400 to the Agreement,

NOW THEREFORE BE IT RESOLVED that the City Council of the City of Watertown hereby approves Amendment No. 1, a copy of which is attached and made part of this resolution, in the amount of $58,300 to Professional Services Agreement with GHD Consulting Engineers LLC to perform design services for the Reservoir Parallel Watermain Project, and

BE IT FURTHER RESOLVED that the City Manager is hereby authorized and directed to execute the Agreement on behalf of City Council.

Seconded by

AMENDMENT NO. 1

TO AGREEMENT BETWEEN
CITY OF WATERTOWN, NY
AND
GHD CONSULTING ENGINEERS, LLC

WHEREAS, GHD Consulting Engineers, LLC (ENGINEER) and the City of Watertown, NY (OWNER) entered into an Agreement dated April 4, 2012 to perform professional services for the 16-inch Parallel Watermain Project; and

WHEREAS, OWNER has requested additional services for the design of 16-inch Parallel Watermain Project; and

WHEREAS, OWNER wishes to enter into an Agreement with ENGINEER for construction phase services of 16-inch Parallel Watermain Project; and

NOW, THEREFORE, ENGINEER and OWNER agree to amend the Agreement as follows.

SCOPE OF SERVICES

Add the following Description of Modifications to Exhibit A:

1. Engineer shall perform or furnish the following Additional Services:
   A. Design Phase Services:
      1) Prepare a design (plans and specifications) for a new precast concrete valve vault for the large reservoir, relocation of electrical service from the existing valve vault to the new valve vault, additional gate valves and approximately 120 linear feet of 16-inch ductile iron pipe. The design basis is that rock foundation conditions will be encountered and Geotechnical information for the additional design services shall be based from record documents from the OWNER.
      2) Preparation and submission of a Stormwater Pollution Prevention Plan (SWPPP) in accordance with the NYSDEC SDPES General Permit (GP-0-10-001).The SWPPP will include a hydrologic modeling evaluation of the watershed. The SWPPP shall include development of post construction stormwater controls for the anticipated trail.
      3) Design will also include demolition and restoration plans for the existing vault area.
      4) Design of a gravel trail/vehicle maintenance corridor parallel to the water main through Thompson Park. The CITY shall provide details associated with trail (dimensions, type).
   B. Construction Phase Services:
      1) Make visits to the Site at intervals appropriate to the various stages of construction, as Consultant deems necessary, to observe as an experienced and qualified design professional the progress and quality of the Work. Such visits and observations by Consultant, are not intended to be exhaustive or to extend to every aspect of the Work or to involve detailed inspections of the Work beyond the responsibilities specifically assigned to Consultant in this Agreement, but rather are to be limited to spot checking, selective sampling, and similar methods of general observation of the Work based on Consultant's exercise of professional judgment. Based on information obtained during such visits and observations, Consultant will determine in general if the Work is proceeding in accordance with the Contract Documents, and Consultant shall keep ENGINEER informed of the progress of the Work.
      2) The purpose of Consultant's visits to the Site, will be to enable Consultant to better carry out the duties and responsibilities assigned to and undertaken by Consultant during the Construction Phase; and, in addition, by the exercise of Consultant's efforts, as an experienced and qualified design professional, to provide for Engineer a greater degree of confidence that the completed Work will

conform in general to the Contract Documents and that Contractor has implemented and maintained the integrity of the design concept of the completed Project as a functioning whole as indicated in the Contract Documents. Consultant shall not, during such visits or as a result of such observations of the Work in progress, supervise, direct, or have control over the Work, nor shall Consultant have authority over or responsibility for the means, methods, techniques, sequences, or procedures of construction selected or used by Contractor, for security or safety at the Site, for safety precautions and programs incident to the Work, or for any failure of Contractor to comply with Laws and Regulations applicable to Contractor's furnishing and performing the Work. Accordingly, Consultant neither guarantees the performance of any Contractor nor assumes responsibility for any Contractor's failure to furnish and perform the Work in accordance with the Contract Documents.

3) Site visits will occur weekly during construction of the 16-inch parallel watermain and daily during construction of the valve vault and interconnections adjacent to the reservoirs.
4) 190 hours over an anticipated eight (8) week construction period has been budgeted for site visits.
5) An allowance of 24 hours has been provided for potential design modifications due to field conditions.
6) Progress Meetings: ENGINEER will attend three (3) monthly progress meetings during the construction of the watermain and grassed trail corridor, coinciding with site visits.
7) City of Watertown shall provide Certification of Completion to New York State Department of Health.

PROJECT COSTS

For the Additional Services detailed above, OWNER shall pay ENGINEER the following additional compensation: 1.A.) lump sum amount of **$28,400** for Design Phase services, 1.B.) **$30,000** for Construction Phase services billed, at standard GHD rates, hourly plus reimbursable expenses.

The schedule for rendering services is modified as follows:

A. Contract Documents Approval – April/May 2013
B. Project Bid Opening – June/July 2013

Amendment Summary (Reference only)	
Original Agreement amount	$35,900
Amendment No. 1 amount	
1.A.) Design Phase (Lump Sum)	**$28,400**
1.B.) Construction Phase (Hourly)	**$30,000**
Adjusted Agreement amount	**$94,300**

AUTHORIZATION

The return of one signed copy of this Amendment No. 1, together with a copy of a formal resolution of approval, constitutes acceptance of this Amendment and shall be written authorization for ENGINEER to proceed with the Scope of Service outlined above.

IN WITNESS WHEREOF, the parties hereto have made and executed this Amendment No. 1 as of the last date entered below.

ENGINEER:

GHD CONSULTING ENGINEERS, LLC

By: _____
Michael E. Tamblin, P.E.

Title: Principal

Date: 2/22/13

JBA/mrv

OWNER:

CITY OF WATERTOWN, NEW YORK

By: _____

Title: _____

Date: _____

1869

CITY OF WATERTOWN
ENGINEERING DEPARTMENT
MEMORANDUM

DATE: 22 February 2013

TO: Kurt Hauk, City Engineer

FROM: Justin Wood, Civil Engineer II JW

SUBJECT: Reservoir Parallel Watermain – Amendment No. 1

GHD Consulting Engineers, LLC was hired by the City, via City Council approval on April 2, 2012, to perform design services for the Reservoir Parallel Watermain project. The purpose of the project is to provide redundancy in the water supply system to the City's reservoir tanks, in order to maintain adequate capacity and pressure in the system, should the existing 100 plus year old watermain break or require maintenance. The project entails the design of approximately 3,000 linear feet of 16 inch watermain, running parallel to an existing 16 inch watermain, from Thompson Boulevard at Moore Avenue to the reservoir tanks in Thompson Park. The project also includes replacement of valves and manifold systems at the reservoir tanks themselves, and evaluation of the existing 16 inch watermain for possible rehabilitation.

GHD is currently developing final design plans to submit to NYS DOH for approval, with intentions to put the project out to bid in late winter or early spring of 2013. As detailed design progressed, it became evident the scope of work should be expanded at the reservoir tanks. Specifically, it was determined that the existing valve vault building should be demolished and replaced with a new valve vault structure. The existing building, constructed in the mid to late 1800's, is in poor condition and was not ideal for installation of replacement valves. Furthermore, the building is located such that a new water main could not be installed all the way up to the Large Reservoir, due to the approximately 20 foot deep excavation and the close proximity of the building to the reservoir. The result would be a "weak link" in the watermains supplying the reservoir and the system, by leaving some of the old watermain in service. This additional design work was not included in the original agreement.

Design of a gravel vehicle maintenance corridor parallel to the watermains was also added to the project, in order to facilitate access to and to minimize overgrowth around the watermains. The area of disturbance, necessary to install the parallel watermain and valve vault alone, will exceed 1 acre and therefore require a Storm Water Pollution Prevention Plan (SWPPP) be prepared and submitted to NYS DEC. This was not anticipated nor included in the original agreement, because the original project limits did not exceed the 1 acre threshold.

The original Professional Services Agreement was a lump sum fee of $35,900.00 for design and bidding of the parallel watermain, and evaluation of the existing 16 inch watermain. Amendment No. 1 includes an additional lump sum fee of $28,400.00 for design services to incorporate the above changes, and an hourly based agreement of $30,000.00 for construction inspection services. This brings the total agreement fees to $94,300. The construction inspection agreement is not normally presented to Council until the project is bid, and a low bidder recommended for award. GHD, however, has already performed much of the out of scope design services included in Amendment No. 1 and the project will be put out to bid in the coming weeks anyway, therefore the Amendment is being presented at this time for City Council approval.

Cc: Mike Sligar, Water Superintendent
Kevin Patchen, Supervisor of Water Distribution System

FISCAL YEAR 2012-2013
CAPITAL BUDGET
INFRASTRUCTURE
WATER MAIN CONSTRUCTION

PROJECT DESCRIPTION	COST
Parallel Transmission Main to Thompson Park Reservoirs Designing and installing a 3,000 lineal foot of new 16 inch transmission main to upgrade distribution capacities by improving peak flow deliveries from the reservoirs, reducing discharge pressures on the Water Treatment Plant's finished water pumps, and improving vital redundancy in the distribution system. 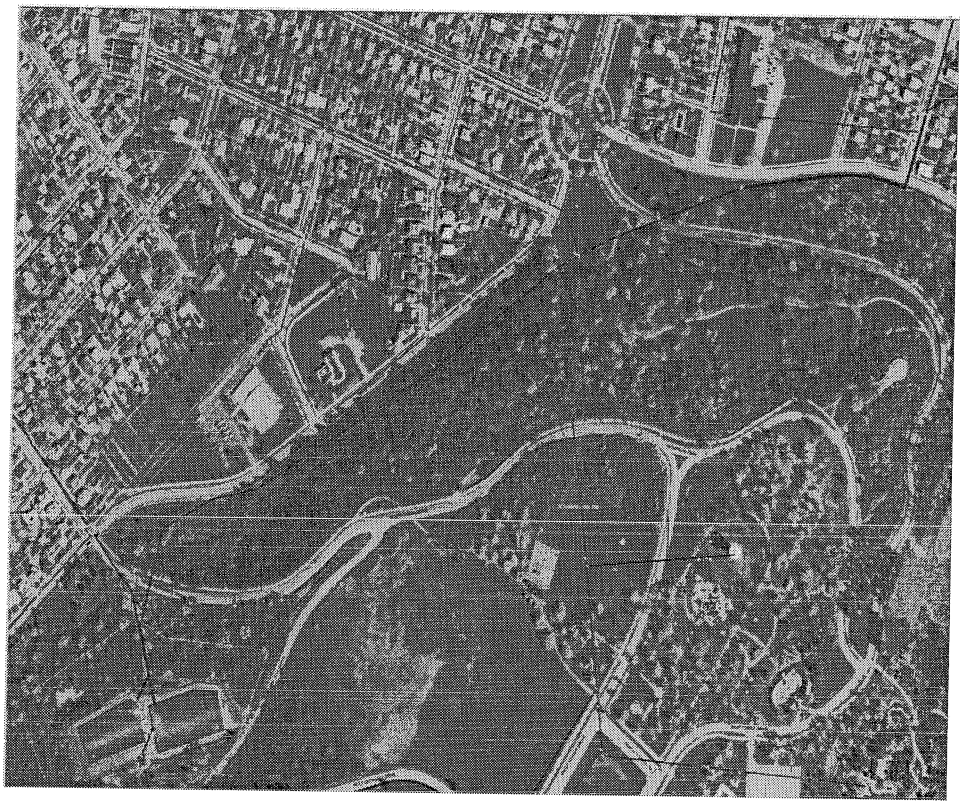 Funding to support this project will be through the issuance of a 5 year serial bond with projected FY 2013-14 debt service of 99,667.	$1,000,000
TOTAL	$1,000,000

Res No. 5

February 27, 2013

To: The Honorable Mayor and City Council

From: Kenneth A. Mix, Planning & Community Development Coordinator

Subject: Finding That the Construction of the Thompson Park Parallel Water Main Project Will Not Have a Significant Impact on the Environment

The City Council has before it a bond ordinance to fund the parallel water main project in Thompson Park. The proposed 3,000 linear feet of 16" main will run parallel to a 100+ year old main to provide redundancy in this critical part of the water system connecting the Water Treatment Plant with the reservoirs. This section will run from Moore Avenue to the reservoirs. The project also includes replacement of the valves and manifold systems at the reservoirs. There will be a maintenance drive running parallel with the water mains that can also be used as a recreational trail that connects with the rest of the trail system in the park.

The State Environmental Quality Review Act requires the City Council to complete an environmental review of construction projects before funding or undertaking them. The proposed bond ordinance is a commitment to fund this project, therefore the Council must determine the significance of any environmental impact prior to approving it.

This project is "Unlisted" and thus a Short Environment Assessment Form is attached. The City Council must complete Part II, and Part III if necessary, of the Environmental Assessment Form and adopt the attached resolution before it may vote on the Ordinance. The resolution states that the proposed project will not have a significant impact on the environment.

Resolution No. 5

March 4, 2013

RESOLUTION

	YEA	NAY
Council Member BURNS, Roxanne M.		
Council Member BUTLER, Joseph M. Jr.		
Council Member MACALUSO, Teresa R.		
Council Member SMITH, Jeffrey M.		
Mayor GRAHAM, Jeffrey E.		
Total		

Finding That the Construction of the Thompson Park Parallel Water Main Project Will Not Have a Significant Impact on the Environment

Introduced by

_____

WHEREAS the City Council of the City of Watertown, New York, has before it a proposed Ordinance approving a bond issue to fund the design and construction of a parallel water main in and around Thompson Park, and

WHEREAS the City Council must evaluate all proposed actions submitted for its consideration in light of the State Environmental Review Act (SEQRA), and the regulations promulgated pursuant thereto, and

WHEREAS the approval of funding for this project would constitute such an "Action," and

WHEREAS the City Council has determined that the proposed project is an Unlisted Action as that term is defined by 6NYCRR Section 617.2, and

WHEREAS to aid the City Council in its determination as to whether the proposed amendment will have a significant impact on the environment, Part I of a Short Environmental Assessment Form has been prepared, a copy of which is attached and made part of this Resolution,

Resolution No. 5

March 4, 2013

RESOLUTION

Finding That the Construction of the Thompson Park Parallel Water Main Project Will Not Have a Significant Impact on the Environment

	YEA	NAY
Council Member BURNS, Roxanne M.		
Council Member BUTLER, Joseph M. Jr.		
Council Member MACALUSO, Teresa R.		
Council Member SMITH, Jeffrey M.		
Mayor GRAHAM, Jeffrey E.		
Total		

NOW THEREFORE BE IT RESOLVED by the City Council of the City of Watertown, New York, that:

1. Based upon its examination of the Short Environmental Assessment Form and comparing the proposed action with the criteria set forth in 6NYCRR Section 617.7, no significant impact is known and the contruction of the Thompson Park Parallel Water Main Project will not have a significant impact on the environment.

2. The Mayor of the City of Watertown is authorized to execute the Environmental Assessment Form to the effect that the City Council is issuing a Negative Declaration under SEQRA.

3. This Resolution shall take effect immediately.

Seconded by

617.20

Appendix C
State Environmental Quality Review
SHORT ENVIRONMENTAL ASSESSMENT FORM
For UNLISTED ACTIONS Only

PART I - PROJECT INFORMATION (To be completed by Applicant or Project Sponsor)

1. APPLICANT/SPONSOR
City of Watertown

2. PROJECT NAME
Parallel Water Transmission Main

3. PROJECT LOCATION:
Municipality City of Watertown County Jefferson

4. PRECISE LOCATION (Street address and road intersections, prominent landmarks, etc., or provide map)
Thompson Park, City of Watertown

5. PROPOSED ACTION IS:
☐ New ☐ Expansion ☑ Modification/alteration

6. DESCRIBE PROJECT BRIEFLY:
Construction of a 16-inch water transmission main adjacent to an existing 16-inch water transmission main from an interconnection near Olmsted Drive to the city water storage reservoirs. The project will also include the replacement of an existing valve vault with a new vault on the city water reservoir facility.

7. AMOUNT OF LAND AFFECTED:
Initially 1.5 acres Ultimately 1.5 acres

8. WILL PROPOSED ACTION COMPLY WITH EXISTING ZONING OR OTHER EXISTING LAND USE RESTRICTIONS?
☑ Yes ☐ No If No, describe briefly

9. WHAT IS PRESENT LAND USE IN VICINITY OF PROJECT?
☐ Residential ☐ Industrial ☐ Commercial ☐ Agriculture ☑ Park/Forest/Open Space ☐ Other
Describe:

10. DOES ACTION INVOLVE A PERMIT APPROVAL, OR FUNDING, NOW OR ULTIMATELY FROM ANY OTHER GOVERNMENTAL AGENCY (FEDERAL, STATE OR LOCAL)?
☑ Yes ☐ No If Yes, list agency(s) name and permit/approvals:
New York State Department of Health

11. DOES ANY ASPECT OF THE ACTION HAVE A CURRENTLY VALID PERMIT OR APPROVAL?
☐ Yes ☑ No If Yes, list agency(s) name and permit/approvals:

12. AS A RESULT OF PROPOSED ACTION WILL EXISTING PERMIT/APPROVAL REQUIRE MODIFICATION?
☐ Yes ☑ No

I CERTIFY THAT THE INFORMATION PROVIDED ABOVE IS TRUE TO THE BEST OF MY KNOWLEDGE
Applicant/sponsor name: City of Watertown Date: 2-25-2013
Signature: Justin J. Wood

If the action is in the Coastal Area, and you are a state agency, complete the Coastal Assessment Form before proceeding with this assessment

Reset

PART II - IMPACT ASSESSMENT (To be completed by Lead Agency)

A. DOES ACTION EXCEED ANY TYPE I THRESHOLD IN 6 NYCRR, PART 617.4? If yes, coordinate the review process and use the FULL EAF.

☐ Yes ☐ No

B. WILL ACTION RECEIVE COORDINATED REVIEW AS PROVIDED FOR UNLISTED ACTIONS IN 6 NYCRR, PART 617.6? If No, a negative declaration may be superseded by another involved agency.

☐ Yes ☐ No

C. COULD ACTION RESULT IN **ANY** ADVERSE EFFECTS ASSOCIATED WITH THE FOLLOWING: (Answers may be handwritten, if legible)

C1. Existing air quality, surface or groundwater quality or quantity, noise levels, existing traffic pattern, solid waste production or disposal, potential for erosion, drainage or flooding problems? Explain briefly:

C2. Aesthetic, agricultural, archaeological, historic, or other natural or cultural resources; or community or neighborhood character? Explain briefly:

C3. Vegetation or fauna, fish, shellfish or wildlife species, significant habitats, or threatened or endangered species? Explain briefly:

C4. A community's existing plans or goals as officially adopted, or a change in use or intensity of use of land or other natural resources? Explain briefly:

C5. Growth, subsequent development, or related activities likely to be induced by the proposed action? Explain briefly:

C6. Long term, short term, cumulative, or other effects not identified in C1-C5? Explain briefly:

C7. Other impacts (including changes in use of either quantity or type of energy)? Explain briefly:

D. WILL THE PROJECT HAVE AN IMPACT ON THE ENVIRONMENTAL CHARACTERISTICS THAT CAUSED THE ESTABLISHMENT OF A CRITICAL ENVIRONMENTAL AREA (CEA)?

☐ Yes ☐ No If Yes, explain briefly:

E. IS THERE, OR IS THERE LIKELY TO BE, CONTROVERSY RELATED TO POTENTIAL ADVERSE ENVIRONMENTAL IMPACTS?

☐ Yes ☐ No If Yes, explain briefly:

PART III - DETERMINATION OF SIGNIFICANCE (To be completed by Agency)

INSTRUCTIONS: For each adverse effect identified above, determine whether it is substantial, large, important or otherwise significant. Each effect should be assessed in connection with its (a) setting (i.e. urban or rural); (b) probability of occurring; (c) duration; (d) irreversibility; (e) geographic scope; and (f) magnitude. If necessary, add attachments or reference supporting materials. Ensure that explanations contain sufficient detail to show that all relevant adverse impacts have been identified and adequately addressed. If question D of Part II was checked yes, the determination of significance must evaluate the potential impact of the proposed action on the environmental characteristics of the CEA.

☐ Check this box if you have identified one or more potentially large or significant adverse impacts which **MAY** occur. Then proceed directly to the FULL EAF and/or prepare a positive declaration.

☐ Check this box if you have determined, based on the information and analysis above and any supporting documentation, that the proposed action **WILL NOT** result in any significant adverse environmental impacts **AND** provide, on attachments as necessary, the reasons supporting this determination.

Name of Lead Agency	Date
Print or Type Name of Responsible Officer in Lead Agency	Title of Responsible Officer
Signature of Responsible Officer in Lead Agency	Signature of Preparer (If different from responsible officer)

Reset

Site Map: Existing 16” Main Needing a Parallel Feed
City of Watertown

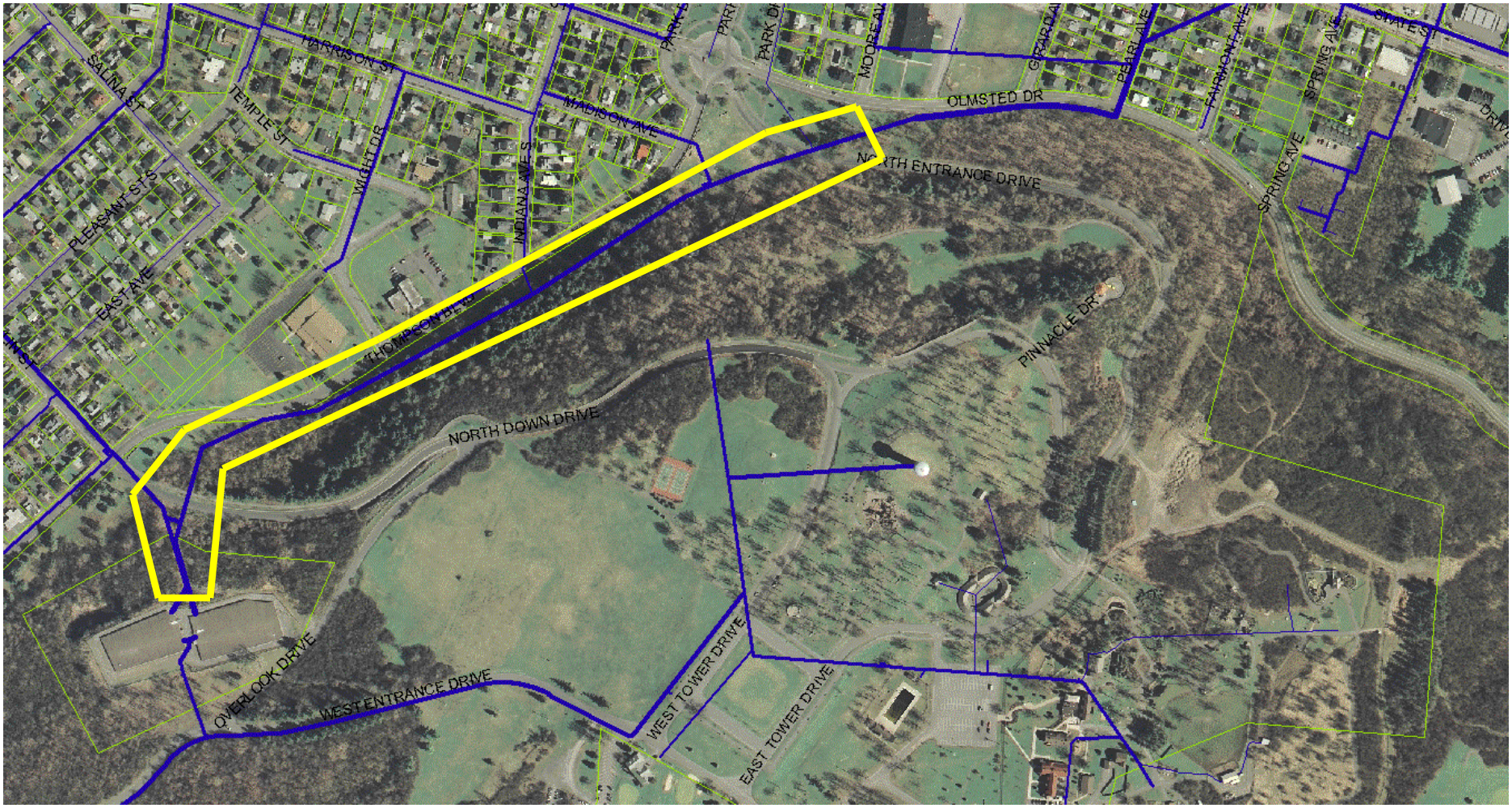

Ord No. 1

February 25, 2013

To: The Honorable Mayor and City Council

From: James E. Mills, City Comptroller

Subject: Bond Ordinance – Parallel Transmission Main to Thompson Park Reservoirs

Included in the Fiscal Year 2012-13 Capital Budget was the project to design and install a new parallel transmission main to the Thompson Park reservoirs estimated cost of $1,000,000.

Included in tonight's agenda is a resolution to approve a professional services agreement amendment with GHD Consulting Engineers, LLC in the amount of $58,400. On April 2, 2012 City Council approved the initial professional services agreement with GHD Consulting Engineers, LLC for the design at a cost of $35,900 which was funded from the Water Fund operating budget.

A summary of the project's current costs are as follows:

GHD Consulting Engineers, LLC		
– Additional design services	$ 28,400	
– Construction inspection services	30,000	$ 58,400
Estimated construction costs		941,600
		$1,000,000

March 4, 2013

ORDINANCE

An Ordinance Authorizing the Issuance of $1,000,000 Bonds of the City of Watertown, Jefferson County, New York, to Pay the Cost of the Design and Installation of a New Parallel Transmission Main to the Thompson Park Reservoirs, in and for Said City

	YEA	NAY
Council Member BURNS, Roxanne M.		
Council Member BUTLER, Joseph M. Jr.		
Council Member MACALUSO, Teresa R.		
Council Member SMITH, Jeffrey M.		
Mayor GRAHAM, Jeffrey E.		
Total		

Introduced by

_____

At a regular meeting of the Council of the City of Watertown, Jefferson County, New York, held at the Municipal Building, in Watertown, New York, in said City, on March 4, 2013, at 7:00 o'clock P.M., Prevailing Time.

The meeting was called to order by _____, and upon roll being called, the following were

PRESENT:

ABSENT:

The following ordinance was offered by _____, who moved its adoption, seconded by _____, to wit:

WHEREAS, the design and installation of a new parallel transmission main to the Thompson Park Reservoirs has been determined to be an "Unlisted" Action within the meaning of the State Environmental Quality Review Act with no significant impact on the environment; and

WHEREAS, it is now desired to authorize the financing of such capital project;

NOW, THEREFORE, BE IT ORDAINED, by the Council of the City of Watertown, Jefferson County, New York, as follows:

Section 1. For the specific object or purpose of paying the cost of the design and installation of a new parallel transmission main to the Thompson Park Reservoirs, in and for the City of Watertown, Jefferson County, New York, including incidental expenses in connection therewith, there are hereby authorized to be issued $1,000,000 bonds of said City pursuant to the provisions of the Local Finance Law.

ORDINANCE

An Ordinance Authorizing the Issuance of $1,000,000 Bonds of the City of Watertown, Jefferson County, New York, to Pay the Cost of the Design and Installation of a New Parallel Transmission Main to the Thompson Park Reservoirs, in and for Said City

	YEA	NAY
Council Member BURNS, Roxanne M.		
Council Member BUTLER, Joseph M. Jr.		
Council Member MACALUSO, Teresa R.		
Council Member SMITH, Jeffrey M.		
Mayor GRAHAM, Jeffrey E.		
Total		

Section 2. It is hereby determined that the estimated maximum cost of the aforesaid specific object or purpose is $1,000,000 and that the plan for the financing thereof is by the issuance of the $1,000,000 bonds of said City authorized to be issued pursuant to this bond ordinance.

Section 3. It is hereby determined that the period of probable usefulness of the aforesaid specific object or purpose is forty years, pursuant to subdivision one of paragraph a of Section 11.00 of the Local Finance Law.

Section 4. Subject to the provisions of the Local Finance Law, the power to authorize the issuance of and to sell bond anticipation notes in anticipation of the issuance and sale of the bonds herein authorized, including renewals of such notes, is hereby delegated to the City Comptroller, the chief fiscal officer. Such notes shall be of such terms, form and contents, and shall be sold in such manner, as may be prescribed by said City Comptroller, consistent with the provisions of the Local Finance Law.

Section 5. The faith and credit of said City of Watertown, Jefferson County, New York, are hereby irrevocably pledged for the payment of the principal of and interest on such obligations as the same respectively become due and payable. An annual appropriation shall be made in each year sufficient to pay the principal of and interest on such obligations becoming due and payable in such year.

Section 6. Such bonds shall be in fully registered form and shall be signed in the name of the City of Watertown, Jefferson County, New York, by the manual or facsimile signature of the City Comptroller and a facsimile of its corporate seal shall be imprinted thereon and may be attested by the manual or facsimile signature of the City Clerk.

Section 7. The powers and duties of advertising such bonds for sale, conducting the sale and awarding the bonds, are hereby delegated to the City Comptroller, who shall advertise such bonds for sale, conduct the sale, and award the bonds in such manner as he shall deem best for the interests of the City, including, but not limited to, the power to sell said bonds to the New York State Environmental Facilities Corporation; provided, however, that in the exercise of these delegated powers, he shall comply fully with the provisions of the Local Finance Law and any

ORDINANCE

An Ordinance Authorizing the Issuance of $1,000,000 Bonds of the City of Watertown, Jefferson County, New York, to Pay the Cost of the Design and Installation of a New Parallel Transmission Main to the Thompson Park Reservoirs, in and for Said City

	YEA	NAY
Council Member BURNS, Roxanne M.		
Council Member BUTLER, Joseph M. Jr.		
Council Member MACALUSO, Teresa R.		
Council Member SMITH, Jeffrey M.		
Mayor GRAHAM, Jeffrey E.		
Total		

order or rule of the State Comptroller applicable to the sale of municipal bonds. The receipt of the City Comptroller shall be a full acquittance to the purchaser of such bonds, who shall not be obliged to see to the application of the purchase money.

Section 8. The power to issue and sell notes to the New York State Environmental Facilities Corporation pursuant to Section 169.00 of the Local Finance Law is hereby delegated to the City Comptroller. Such notes shall be of such terms, form and contents as may be prescribed by said City Comptroller consistent with the provisions of the Local Finance Law.

Section 9. The City Comptroller is hereby further authorized, at his or her sole discretion, to execute a project financing agreement, and any other agreements with the New York State Department of Environmental Conservation and/or the New York State Environmental Facilities Corporation, including amendments thereto, and including any instruments (or amendments thereto) in the effectuation thereof, in order to effect the financing or refinancing of the specific object or purpose described in Section 1 hereof, or a portion thereof, by a bond, and, or note issue of said City in the event of the sale of same to the New York State Environmental Facilities Corporation.

Section 10. The intent of this resolution is to give the City Comptroller sufficient authority to execute those applications, agreements, instruments or to do any similar acts necessary to effect the issuance of the aforesaid bonds and, or notes, without resorting to further action of the City Comptroller.

Section 11. All other matters, except as provided herein relating to such bonds, including determining whether to issue such bonds having substantially level or declining annual debt service and all matters related thereto, prescribing whether manual or facsimile signatures shall appear on said bonds, prescribing the method for the recording of ownership of said bonds, appointing the fiscal agent or agents for said bonds, providing for the printing and delivery of said bonds (and if said bonds are to be executed in the name of the City by the facsimile signature of its City Comptroller, providing for the manual countersignature of a fiscal agent or of a designated official of the City), the date, denominations, maturities and interest payment dates, place or places of payment, and also including the consolidation with other issues, shall be determined by the City Comptroller. It is hereby determined that it is to the financial advantage

ORDINANCE

An Ordinance Authorizing the Issuance of $1,000,000 Bonds of the City of Watertown, Jefferson County, New York, to Pay the Cost of the Design and Installation of a New Parallel Transmission Main to the Thompson Park Reservoirs, in and for Said City

	YEA	NAY
Council Member BURNS, Roxanne M.		
Council Member BUTLER, Joseph M. Jr.		
Council Member MACALUSO, Teresa R.		
Council Member SMITH, Jeffrey M.		
Mayor GRAHAM, Jeffrey E.		
Total		

of the City not to impose and collect from registered owners of such bonds any charges for mailing, shipping and insuring bonds transferred or exchanged by the fiscal agent, and, accordingly, pursuant to paragraph c of Section 70.00 of the Local Finance Law, no such charges shall be so collected by the fiscal agent. Such bonds shall contain substantially the recital of validity clause provided for in Section 52.00 of the Local Finance Law and shall otherwise be in such form and contain such recitals in addition to those required by Section 52.00 of the Local Finance Law, as the City Comptroller shall determine.

Section 12. The validity of such bonds and bond anticipation notes may be contested only if:

(1) Such obligations are authorized for an object or purpose for which said City is not authorized to expend money, or

(2) The provisions of law which should be complied with at the date of publication of this resolution are not substantially complied with,

and an action, suit or proceeding contesting such validity is commenced within twenty days after the date of such publication, or

(3) Such obligations are authorized in violation of the provisions of the Constitution.

Section 13. This resolution shall constitute a statement of official intent for purposes of Treasury Regulations Section 1.150 2. Other than as specified in this resolution, no monies are, or are reasonably expected to be, reserved, allocated on a long term basis, or otherwise set aside with respect to the permanent funding of the object or purpose described herein.

Section 14. This ordinance, which takes effect immediately, shall be published in summary in the Watertown Daily Times, the official newspaper, together with a notice of the City Clerk in substantially the form provided in Section 81.00 of the Local Finance Law.

Unanimous consent moved by _____, seconded by _____, with all voting "AYE".

The question of the adoption of the foregoing ordinance was duly put to a vote on roll call, which resulted as follows:

ORDINANCE

An Ordinance Authorizing the Issuance of $1,000,000 Bonds of the City of Watertown, Jefferson County, New York, to Pay the Cost of the Design and Installation of a New Parallel Transmission Main to the Thompson Park Reservoirs, in and for Said City

	YEA	NAY
Council Member BURNS, Roxanne M.		
Council Member BUTLER, Joseph M. Jr.		
Council Member MACALUSO, Teresa R.		
Council Member SMITH, Jeffrey M.		
Mayor GRAHAM, Jeffrey E.		
Total		

_____VOTING _____
_____VOTING _____
_____VOTING _____
_____VOTING _____
_____VOTING _____

The ordinance was thereupon declared duly adopted.
* * * * * *

APPROVED BY THE MAYOR

_____, 2013.
Mayor

STATE OF NEW YORK)
) ss.:
COUNTY OF JEFFERSON)

I, the undersigned Clerk of the City of Watertown, Jefferson County, New York, DO HEREBY CERTIFY:

That I have compared the annexed extract of the minutes of the meeting of the Council of said City, including the ordinance contained therein, held on March 4, 2013, with the original thereof on file in my office, and that the same is a true and correct transcript therefrom and of the whole of said original so far as the same relates to the subject matters therein referred to.

I FURTHER CERTIFY that all members of said Council had due notice of said meeting.

I FURTHER CERTIFY that, pursuant to Section 103 of the Public Officers Law (Open Meetings Law), said meeting was open to the general public.

ORDINANCE

An Ordinance Authorizing the Issuance of $1,000,000 Bonds of the City of Watertown, Jefferson County, New York, to Pay the Cost of the Design and Installation of a New Parallel Transmission Main to the Thompson Park Reservoirs, in and for Said City

	YEA	NAY
Council Member BURNS, Roxanne M.		
Council Member BUTLER, Joseph M. Jr.		
Council Member MACALUSO, Teresa R.		
Council Member SMITH, Jeffrey M.		
Mayor GRAHAM, Jeffrey E.		
Total		

I FURTHER CERTIFY that, PRIOR to the time of said meeting, I duly caused a public notice of the time and place of said meeting to be given to the following newspapers and/or other news media as follows:

Newspaper and/or other news media Date given

Regular meeting of the City Council held in accordance with Section 14-1 of the Municipal Code

I FURTHER CERTIFY that PRIOR to the time of said meeting, I duly caused public notice of the time and place of said meeting to be conspicuously posted in the following designated public location(s) on the following dates:

Designated Location(s) of Posted Notice Date of Posting

Regular meeting of the City Council held in accordance with Section 14-1 of the Municipal Code

IN WITNESS WHEREOF, I have hereunto set my hand and affixed the seal of said City on March _____, 2013.

_____

City Clerk

(CORPORATE SEAL)

Seconded by

Tabled

February 27, 2013

To: The Honorable Mayor and City Council

From: Elliott B. Nelson, Confidential Assistant to the City Manager

Subject: Privateers Franchise Agreement Amendment

The attached resolution was introduced at the Regular Meeting of the City Council on February 19, 2013. At that time, this resolution was tabled because Franchise Agreements require a 4/5 vote for approval and only three members of the City Council were in attendance.

As Council is aware, the City was recently informed that the existing agreement between the City and the Privateers to sub-franchise alcohol sales to a third party while the City operates and retains the revenue from the concession stand violates the terms of the Liquor Permit currently in place. As such, an amendment was passed at the Special Meeting of the City Council on January 28 that turned over the operation and revenue from the concession stand to the Privateers' alcohol vendor. Since that time, the State Liquor Authority has again changed their perspective. As was discussed at the Special Meeting of the City Council of February 11, the Privateers' alcohol vendor will now be allowed to secure sales permits. As such, the City is again able to operate and retain the revenue from the concession stand.

The amendment presented tonight will essentially revert the Franchise Agreement back to the language it contained prior to the Second Amendment passed by Council on January 28.

City staff will be available to answer any questions Council may have concerning this legislation.

Resolution No. 3

February 19, 2013

RESOLUTION

	YEA	NAY
Council Member BURNS, Roxanne M.		
Council Member BUTLER, Joseph M. Jr.		
Council Member MACALUSO, Teresa R.		
Council Member SMITH, Jeffrey M.		
Mayor GRAHAM, Jeffrey E.		
Total		

Approving Third Amendment
to 2012-13 Franchise Agreement,
1000 Islands Privateers Professional
Hockey Team, LLC

Introduced by

Council Member Roxanne M. Burns

WHEREAS the City and the 1000 Islands Privateers Professional Hockey Team, LLC entered into a Franchise Agreement for the Privateers' use of the City Municipal Arena for the 2012-13 hockey season, by signature last June 18, 2012 and

WHEREAS said Franchise Agreement is effective as of October 1, 2013, and

WHEREAS the parties now desire to amend said Franchise Agreement to ensure compliance with the regulations and other requirements of the New York State Liquor Authority in connection with the 1000 Islands Privateers' selection of a sub-franchisee to obtain permits for the sale of beer and wine at the Privateers' home games,

NOW THEREFORE BE IT RESOLVED that the City Council of the City of Watertown hereby approves the Third Amendment to the Franchise Agreement between the City of Watertown and the 1000 Islands Privateers Professional Hockey Team, LLC, a copy of which is attached and made a part of this resolution, and

BE IT FURTHER RESOLVED that Sharon Addison, City Manager, is hereby authorized and directed to execute this Amendment to the Franchise Agreement on behalf of the City of Watertown.

Seconded by Council Member Teresa R. Macaluso

THIRD AMENDMENT TO FRANCHISE AGREEMENT

THE CITY OF WATERTOWN, NEW YORK AND 1000 ISLANDS PRIVATEERS PROFESSIONAL HOCKEY TEAM, LLC

This Third Amendment to Franchise Agreement is being made and is intended to be effective as of February 1, 2013 between THE CITY OF WATERTOWN, NEW YORK, with principal offices located at 245 Washington Street, Watertown, New York 13601 ("City") and 1000 ISLANDS PRIVATEERS PROFESSIONAL HOCKEY TEAM, LLC (the "Privateers"), with principal offices located at P.O. Box 779, Alexandria Bay, New York 13607.

INTRODUCTION

WHEREAS, the City and the Privateers entered into a Franchise Agreement for the Privateers' use of the City's Ice Arena for the 2012-2013 hockey season, by signature last dated June 18, 2012, which Agreement is effective October 1, 2012; and

WHEREAS, the parties amended that Agreement by Amendment effective as of October 1, 2012, to reflect the parties' intentions concerning the Privateers' grant of a sub-franchise for the sale of Beer and Wine during the Privateers' hockey games; and

WHEREAS, the parties amended that Agreement by Amendment effective as of February 1, 2013 to ensure the parties' compliance with regulatory requirements of the New York State Liquor Authority ("SLA") concerning control of the ice arena premises during licensure, including, but not limited to, the control of concessions; and

WHEREAS, the parties not wish to further amend said Agreement, effective as of February 20, to rescind the language contained in the previous amendment, due to another change in the regulatory requirements by the SLA;

The parties hereby agree to amend the Agreement as follows:

Section IV(b) entitled "Beer and Wine Sales" of the Agreement shall be replaced, in its entirety, with the following:

b. Beer and Wine Sales.

The Privateers desire to provide for the sale of beer and wine at the games to be held pursuant to this Agreement, and to enter into a sub-franchise agreement with a vendor, which shall obtain permits for beer and wine sales for the Ice Arena limited to the term of this Agreement.

The Privateers' sub-franchise agreement with said vendor shall provide that the vendor shall be bound by the terms and conditions of any license issued by the SLA, and shall also be bound by the terms of the City's "ABC Law, Rules and Guidelines," as the same may, from time

to time, be amended. A copy of the City's current "ABC Law, Rules and Guidelines" is attached to this Agreement as Exhibit "D."

The Privateers shall ensure that said vendor shall provide the City with a copy of any application made to the SLA for said permits. The vendor must also agree that it will discontinue the sale of alcohol at any time when directed to do so by the shift supervisor of the Watertown City Police and provide proof of vendor's liquor liability insurance coverage in the amount of $1,000,000.00 individual/$2,000,000.00 aggregate.

The Privateers acknowledge that, as the party responsible for the sub-franchisee, it is obligated not to permit the alcoholic beverages in violation of the New York Alcoholic Beverage and Control Law, the New York Penal Law, and/or the New York General Obligations Law. If it is determined that the vendor has sold beverages in violation of any of the applicable rules and regulations, including any term of this franchise, the Privateers' right to contract with a sub-franchisee for the sale of alcohol on the premises will be immediately revoked.

The Privateers acknowledge that the City of Watertown is not involved in the sale of alcoholic beverages, and agrees to defend and indemnify the City, including reimbursement of the City's reasonable attorneys' fees, from any and all claims, civil or criminal, arising from any claimed violations of law pertaining to, or statutory duty arising from, the sale of alcoholic beverages.

The Privateers acknowledge that "tailgating" on City Fairgrounds property is not permitted and that the Privateers shall be responsible for monitoring the parking areas surrounding the Ice Arena to ensure compliance. No alcohol may be consumed on any City Fairgrounds property except within the Ice Arena.

Any changes to this agreement made necessary by the SLA or any other regulatory authority to ensure the issuance and continuation of vendor's license to offer beer and wine sales shall first be proposed, in writing, by the Privateers' legal counsel. If the City incurs any legal fees in connection with negotiating and implementing such changes, the Privateers agree to reimburse the City its reasonable legal fees and disbursements leading to the adoption of such changes.

Section IV(c) entitled "Food Concessions" of the Agreement shall be replaced, in its entirety, with the following:

The Privateers acknowledge that the City's concession stand(s) will be the only source of food sold during Privateers games

Section V, entitled "City Obligations" of the Agreement shall be amended by adding the following paragraph to the existing language:

f. The City agrees to provide food concessions for each home game, which concession will be staffed by City employees. The City will be responsible for setting the menu, pricing,

etc., and all revenue from concessions will belong to the City. The concession stand will be open at least (1) hour prior to each scheduled home game.

All other terms and conditions of the Agreement between the parties last dated June 18, 2012 remain in full force and effect.

Dated: _____ THE CITY OF WATERTOWN, NEW YORK

By: _____
Sharon Addison, City Manager

Dated: _____ 1000 ISLANDS PRIVATEERS PROFESSIONAL HOCKEY TEAM, LLC

By: _____
Nicole Kirnan, Managing Member

February 27, 2013

To: The Honorable Mayor and City Council

From: Elliott B. Nelson, Confidential Assistant to the City Manager

Subject: Elevated Water Storage Tank at Thompson Park

At the Work Session of the City Council held on Monday, November 26, 2012 Water Superintendent Michael J. Sligar briefed the City Council on the current state of the Elevated Water Storage Tank at Thompson Park. A report to the City Manager and Council dated November 13, 2012 formed the basis of that briefing. The City Council authorized that the Water Department proceed with Task 1 immediately:

Task 1: Have consultant prepare an evaluation of the alternatives as outline above; brief City Manager and City Council on findings with a proposed selection of alternatives. Secure City Council approval of the proposed selection of alternatives.

On February 18, 2013 Conestoga – Rovers & Associates (CRA) submitted their evaluation of alternatives for the rehabilitation of the 250,000 Gallon Elevated Water Storage Tank at Thompson Park (draft evaluation of alternatives report attached to this report). Water Superintendent Sligar has reviewed the report and considers it complete and clear, and has instructed CRA to finalize the report. Both rehabilitation of the existing tank and replacement of the existing tank with a new tank were considered with several variations for each outlined in the draft report. Table 5 of the draft report indicates that the rehabilitation alternative with a full exterior recoat and a two-coat interior system is the most cost effective alternative. Water Superintendent Sligar agrees with their findings.

It is the recommendation of Water Superintendent Sligar that, upon the approval of City Council, the City proceed immediately with Task 2 outlined in the November 13, 2012 report:

Task 2: Negotiate and prepare for City Council approval a consultant agreement for the preparation of plans and specifications for the needed rehabilitation, and for assistance with advertising, budding and administration of the rehabilitation project.

The City is behind with the initial schedule that called for us to be at this point by the end of December 2012. However, Water Superintendent Sligar believes we are still in a comfortable position to complete the entire rehabilitation project this summer as planned.

CONESTOGA-ROVERS
& ASSOCIATES

Thompson Park Water Tank Evaluation

City of Watertown
Jefferson County, New York

DRAFT

Prepared by:
CRA Infrastructure & Engineering, Inc.

State Tower Building, Suite 220
109 South Warren Street
Syracuse, New York 13202

Office: (315) 233-4270
Fax: (315) 425-4050

February 2013
REF. NO. 630957 (2)

TABLE OF CONTENTS

Page No.

1.0 INTRODUCTION 3
1.1 BACKGROUND 3
1.2 COST ANALYSIS INFORMATION 4

2.0 TANK REHABILITATION 5
2.1 EXTERIOR TANK RECOATING 6
2.1.1 FULL EXTERIOR RECOATING 8
2.1.2 PARTIAL EXTERIOR RECOATING 9
2.1.3 MAINTENANCE OF TANK EXTERIOR 10
2.1.4 EXTERIOR TANK RECOATING COST SUMMARY 11
2.2 INTERIOR TANK RECOATING 12
2.2.2 THREE-COAT SYSTEM 12
2.2.1 TWO-COAT SYSTEM 13
2.2.3 MAINTENANCE OF TANK INTERIOR 14
2.2.4 INTERIOR TANK RECOATING COST SUMMARY 14
2.3 TANK REHABILITATION RECOMMENDATIONS 15

3.0 REPLACEMENT OF WATER TANK 18
3.1 WELDED STEEL TANK (IN-KIND REPLACEMENT) 18
3.2 GLASS-LINED TANK 19
3.3 MAINTENANCE OF NEW TANKS 20
3.4 TANK REPLACEMENT COST SUMMARY 21
3.5 TANK REPLACEMENT RECOMMENDATIONS 22

4.0 REHABILITATION AND REPLACEMENT SUMMARY AND RECOMMENDATIONS 23

5.0 NEXT STEPS 24

LIST OF FIGURES
(Within Text)

FIGURE 1 TNEMEC ADHESION TEST ON TANK EXTERIOR

FIGURE 2 LOWER AREA OF TANK VESSEL INTERIOR

FIGURE 3 THOMPSON PARK WATER TANK LOCATION

FIGURE 4 EXTERIOR OF TANK ROOF

FIGURE 5 CURRENT CB& I THOMPSON PARK WATER TANK

FIGURE 6 PROPOSED WELDED STEEL (CB & I) WATER TANK

FIGURE 7 GLASS LINED BOLTED STEEL TANK

LIST OF TABLES
(Within Text)

TABLE 1 EXTERIOR TANK RECOATING COST SUMMARY

TABLE 2 INTERIOR TANK RECOATING COST SUMMARY

TABLE 3 RECOMMENDED TANK REHABILITATION COST SUMMARY

TABLE 4 TANK REPLACEMENT COST SUMMARY

TABLE 5 RECOMMENDED REHABILITATION AND REPLACEMENT COST COMPARISON

LIST OF APPENDICES

APPENDIX A CITY OF WATERTOWN INSPECTION AND EVALUATION OF THOMPSON PARK WATER TANK - SUMMARY OF SITE VISIT CONDUCTED SEPTEMBER 12, 2012

APPENDIX B PAINT TEST AND ADHESION TEST RESULTS

APPENDIX C CHICAGO BRIDGE AND IRON (CB&I) STEEL TANK BROCHURE

APPENDIX D STATEWIDE AQUASTORE INC. COST ESTIMATE AND BROCHURES

1.0 INTRODUCTION

CRA Infrastructure & Engineering, Inc. (CRA) has been retained by the City of Watertown (City) to evaluate options for rehabilitation and replacement of the Thompson Park Water Tank (Tank). The Tank is a 250,000-gallon elevated welded steel water storage tank located in Thompson Park, Watertown, New York. On September 12, 2012, CRA conducted a site visit and visual, non-destructive inspection of the tank. A summary of the inspection and conditions evaluation (considered the Tank Inspection Report in this document) was presented to the City on October 24, 2012 and is included in Appendix A of this report. The investigation concluded that the Tank's condition has deteriorated which prompted the need to further evaluate rehabilitation or replacement of the tank.

1.1 BACKGROUND

This report provides an evaluation of alternatives for rehabilitation and replacement of the Tank. As outlined in CRA's proposal, the following rehabilitation and replacement options are evaluated in this report:

1. A comparison of tank rehabilitation options:
    a. Exterior rehabilitation options:
        i. Full exterior recoating
        ii. Partial exterior recoating
    b. Interior rehabilitation options:
        i. Two-coat system
        ii. Three-coat system

2. A comparison of tank replacement options:
    a. In-kind steel tank
    b. Glass-lined tank

This report discusses the components and maintenance requirements of each system as well as the advantages and disadvantages of each. A cost evaluation that compares the total capital costs and life cycles costs is also provided. The cost evaluation component of this report is discussed in the following section.

1.2 COST ANALYSIS INFORMATION

The cost analysis provided in this report includes an evaluation of construction, total capital, maintenance present worth, and life cycle costs. The total capital cost of each option includes a 35 percent contingency of the estimated construction costs for engineering, legal and administrative costs. The present worth of anticipated maintenance costs have been calculated using a five percent effective rate of return and two percent inflation. A thirty year service period was used in the evaluation of each option.

The life cycle costs have been calculated to provide a common baseline for comparison between the different options evaluated. The life cycle cost of each option includes the total capital and present worth of maintenance incurred over a thirty year period and is presented in today's dollars (present worth). For the purposes of this evaluation recoating the exterior and interior of the tank during the thirty year service life is considered a maintenance item, although it may be considered a capital project by the City.

2.0 TANK REHABILITATION

The Tank Inspection Report outlined the various tests conducted on the Tank and the associated testing results. Although the memo concluded that the exterior steel is generally structurally sound, the exterior coating of the Tank showed signs of fading, chalking, and spot corrosion. Also, samples of the coating were tested and determined to contain lead, cadmium and chromium. CRA recommended that either a full or a partial removal and recoating of the Tank exterior be performed.

During CRA's original evaluation, Performance Coatings Corp. (Independent Representative of Tnemec Company, Inc.) was consulted. On Friday January 11, 2013, Performance Coating Corp. conducted additional dry film thickness measurements and adhesion tests on the Tank (see Figure 1) to assist in refining tank recoating options. The test results, provided in Appendix B, show that the adhesion of the Tank exterior is "only fair". Also, the testing revealed delamination between the topcoat and the underlying coats, which is problematic for any kind of an overcoat system. This additional testing also revealed that the finish coat on this Tank is pigmented with aluminum. The aluminum pigmenting results in a thin film of aluminum on the surface that is not well bonded to the underlying coatings. Overcoating in this condition may result in splitting of the existing coating due to the stress applied by a new coating system. Based on the findings of these tests, overcoating may be problematic to the longevity of the tank due to paint bonding concerns. To ensure the strong adhesion of the coating, CRA recommends that the exterior of the Tank be stripped to bare metal and recoated.

During the 2012 Tank inspection the condition of the Tank interior was examined; no major interior structural concerns were identified however deep pitting of the tank bowl was observed (see Figure 2). Several interior features of the Tank showed signs of major coating loss and corrosion. CRA previously recommended removing and replacing the entire interior coating system. It should be noted that the current steel Tank does not have an interior cathodic protection system which would provide an additional level of protection against corrosion and extend the life of the coating system. The installation of a cathodic protection system and the associated maintenance costs are included in the interior rehabilitation and Tank replacement options. The exterior and interior recoating alternatives are discussed in the following sections.

Figure 1

Tnemec Adhesion Test on Tank Exterior

Figure 2

Lower Area of Tank Vessel Interior

2.1 EXTERIOR TANK RECOATING

The primary objective of an exterior coating system is to protect the steel against ultra-violet radiation and corrosion which can subsequently lead to structural deficiencies of the Tank. Risks associated with not maintaining the exterior coating system may include:

- Failure of the Tank in the form of leakage or structural collapse
- Future unplanned service interruptions
- High maintenance costs due to emergency repairs.

Proper maintenance will protect the quality of the water stored and distributed to the community while provided improved tank aesthetics. Welded steel tanks typically require exterior recoating every 15 years which depends on a number of factors, including the quality of coating application and environmental conditions. A tank, such as the Thompson Park Water Tank, which is exposed to the elements, is anticipated to incur protective coating deterioration over time.

CRA's Tank Inspection Report recommended that several exterior repairs be undertaken, such as concrete patching, caulk replacement, installation of locks, partial or full removal and recoat of the Tank exterior. Two exterior recoating options are evaluated in this report: full exterior recoating and partial exterior recoating.

The full exterior recoating includes removal of the existing coating material on the entire exterior surface followed by recoating; the partial recoating includes removal of the existing coating material on the Tank bowl roof and sidewalls and overcoating of the tank column. It should be noted that under both recoating options, the Tank will need to be taken out of service and drained.

For both options removal of the existing Tank coating system will require commercial abrasive blast methods. Due to the hazardous components in the existing coating system (lead, cadmium and chromium), containment of the Tank is required during the commercial abrasive blasting removal process. Therefore, an encapsulation system will be needed.

Encapsulation of a tank consists of installing a scaffolding system over the entire tank followed by an encapsulation system. Rigid Class 'A' encapsulation consists of the installation of a scaffolding system surrounding the entire water tank. The scaffolding must be approved by a Licensed Engineer if the tank is greater than 100 ft. high. A rigid plastic material is pulled to tension and bound around the scaffolding. This encapsulates the work area and contains any air borne particulates during the removal of the existing coating system. The rigid system has much less movement than the alternate flexible system (described below). Therefore, there is a decreased chance of material tearing and subsequent contaminant release.

Class 'A' flexible encapsulation systems are sometimes used when removing tank coatings and are typically half the capital cost of the rigid system. This system is installed using cables hung from the tank roof which pull flexible plastic sheeting from the ground up to cover the tank. During windy conditions, the contractor may experience delays if the work conditions are determined to be unsafe for workers by the City's inspector.

Two factors determine whether a rigid or flexible encapsulation system is utilized. The first is the surrounding area and risk of exposure to hazardous materials that become airborne during blasting. The second factor is the weather conditions in the area of the Tank. The City of Watertown is located near Lake Ontario and its tributary waterways. Due to this environment, high winds are likely to occur during the construction season. Under windy conditions, work cannot be conducted due to worker safety and increased chance of encapsulation tearing. This can cause delays in the completion of the work, due to encapsulation repairs and associated downtime of the water tank. Therefore, CRA recommends a rigid encapsulation system due to the Tank location within a park and the proximity of a nearby playground (see Figure 3).

The installation of the scaffolding associated with the rigid encapsulation system typically requires 2.5 weeks and the same for disassembly (5 total). However, the Tank may remain in service during this time.

Figure 3

Thompson Park Water Tank Location

2.1.1 FULL EXTERIOR RECOATING

The full exterior recoating would include removal of the exterior surface coatings by commercial abrasive blast method followed by the application of a new multi-layer paint coating system (described in detail in the Tank Inspection Report). The full recoating will provide the highest protection against corrosion related leaks, loss of water pressure due to out-of-service tank or service interruptions to residents if additional repairs are needed.

The full exterior removal and recoating can be completed in 4 weeks during which time the Tank cannot be in service. The total time to install/remove the rigid encapsulation system, remove the existing coating and recoat the Tank is estimated to be 9 weeks. It is

possible for exterior recoating work to be conducted at the same time as the interior recoating work to reduce the total number of days the tank is out of service.

2.1.2 PARTIAL EXTERIOR RECOATING

For a partial recoating, CRA recommended that only the Tank bowl roof and side walls be recoated using the commercial abrasive blast methods. These areas were shown to have the highest level of deterioration during Tank inspection (see Figure 4) due to weather and ultra-violet exposure. The remainder of the tank exterior (tank column and piping) would be power-washed and existing coatings would remain. In lieu of the multi-layer system, the power-washed areas would be spot sanded, primed and overcoated with a single layer of urethane. This would help maintain the existing exterior coating in these areas.

Figure 4
Exterior of Tank Roof

It should be noted that due to conclusions by Performance Coatings Corp. (PCC), as outlined in Section 2, it is believed that the existing exterior coating may be problematic for an overcoat layer due the aluminum pigment and require a recoating sooner than the full recoating option. The risks associated with the partial recoat option should be considered in determining the best exterior rehabilitation option. For the purposes of this analysis it is assumed that the overcoating will allow for approximately 7 years between additional recoating.

As previously noted the exterior coating contains lead, cadmium and chromium, and CRA recommends the use of a rigid encapsulation system during coating removal. While removal of the tank coating will only occur on the tank bowl roof and sidewalls encapsulation of the entire Tank will still be required to protect the surrounding environment and workers.

Partial recoating would provide an initial cost savings due to the reduced scope of work. However, the remaining areas of the Tank exterior will require recoating during maintenance of the Tank and a second encapsulation would be necessary to perform the removal and recoating of these areas once their condition has deteriorated (estimated to be 15 years). Under this option the type of encapsulation and time required to perform encapsulation remains the same as for a full tank recoat (5 weeks). The exterior recoating effort will have a shortened duration of approximately 2.5 weeks where the Tank will be out of service. The total time to install/remove the rigid encapsulation system, remove the existing coating and power wash the areas specified, and recoat the Tank is estimated to be 7.5 weeks.

2.1.3 MAINTENANCE OF TANK EXTERIOR

Per American Water Works Association (AWWA) recommendations, potable water storage tanks should be inspected every 3 to 5 years of service. These inspections are important regardless of what level of recoating is performed on this Tank. Regular inspections allow monitoring of the coating and structural condition of the Tank, which are anticipated to deteriorate over time and require additional repairs. Due to the risks associated with overcoating of the Tank column more frequent inspections would be recommended under the partial recoating option to monitor additional areas that may require attention.

Industry experience from paint manufacturer's states that welded steel water tanks will require exterior recoating approximately every 15 years. However, the partial recoating of the Tank bowl roof and side walls may require recoating of the remaining surfaces at a reduced interval. Therefore, the future maintenance of the Tank exterior will be less costly under the full recoating compared to the partial recoating.

2.1.4 EXTERIOR TANK RECOATING COST SUMMARY

Based on the above discussion, CRA has prepared the following cost table associated with the recoating of the Tank exterior. The following assumptions were used in the preparation of Table 1:

- 30 year maintenance period
- Full exterior recoating option includes an additional full exterior recoat at year 15 (recoating in year 30 is not included)
- Partial exterior recoating option includes:
  - Column/exterior piping recoat at year 7
  - Tank bowl roof/sidewalls recoat at year 15
  - Column/exterior piping recoat at year 22
- 2 percent inflation and 5 percent effective rate of return
- Tank repairs totaling $10,400 include concrete ring wall ($600), caulking ($2,000), new doors ($7,000), and column vents ($800)

TABLE 1

Exterior Tank Recoating Cost Summary

Cost Item	*Full Exterior Recoating*	*Partial Exterior Recoating*
Tank Repairs	$10,400	$10,400
Rigid Encapsulation System	$100,000	$100,000
Existing coating removal and recoating	$300,000	$200,000
Construction Cost	**$410,400**	**$310,400**
Contingency (35%)*	$143,600	$108,600
Total Capital Cost	**$554,000**	**$419,000**
Present Worth of Maintenance	$358,700	$707,700
Total Life Cycle Cost	**$911,700**	**$1,126,700**

The maintenance present worth costs do not include recoating of the Tank exterior at year thirty because it is assumed that the Tank will require replacement at that time. It should be noted that the estimated maintenance of the partial recoating option includes partial recoating in year 7, 15 and 22. While the partial recoating option does have a lower total capital cost, this scenario will result in different ages of the exterior coatings which in-turn will require more frequent recoating events.

If the City elects to rehabilitate the existing Tank CRA recommends a full exterior recoat because of the uncertainty associated with overcoating as well as the reduced maintenance and life-cycle costs.

2.2 INTERIOR TANK RECOATING

As discussed in the Tank Inspection Report, the initial inspection showed signs of major coating loss and corrosion of the following Tank components:

- Interior tank bowl
- Dry riser and ladder
- Interior walls
- Underside of the tank roof
- Structural steel support beams

The interior of the tank bowl floor was also heavily pitted. Therefore, CRA previously recommended removing and replacing the entire interior coating system. Upon further research, it was determined that two types of interior coating systems are currently in use: a three-coat system and a two-coat system. The materials and details of these two coating systems were previously discussed in the Tank Inspection Report (Appendix A).

For each option the water tank must be taken out of service. This downtime will include draining the Tank, removing the existing coating system, application of the new coating, and the time for curing of the coating materials. CRA also recommended that a cathodic protection system be installed in the existing Tank at an approximate cost of $20,000 regardless of the interior coating option selected. Any cathodic protection system will require maintenance every 10 years which will consist of anode replacement at an approximate cost of $5,000. These costs are included in the interior recoating cost analysis. The following sections provide a comparison of the two interior coating systems.

2.2.2 THREE-COAT SYSTEM

Historically, a three-coat system was commonly used in New York State (NYS) and is still frequently used outside of NYS. A three-coat system has become less common due to the VOCs associated with the coating system. A three coat system is approximately 70 percent solids and 30 percent solvent and requires 2 to 3 weeks for curing. During

this curing period a maximum level of 40 percent humidity is required inside the tank and will required dehumidification.

Once the Tank is filled and ready to return to service, the water must be tested for presence of VOC's/solvents. If present, the Tank will need to be drained and cleaned. A potential drawback to this coating system is that there have been cases where the NYS Department of Environmental Conservation (NYSDEC) did not allow water that contained VOC's / solvents to be discharged from the tank. In these cases the NYSDEC required the contents of the tank be filtered prior to release which substantially increased the total recoating costs.

2.2.1 TWO-COAT SYSTEM

The two-coat system has been used increasingly in New York State (NYS) in recent years. Due to stringent New York State Department of Health (NYSDOH) VOC and hydrocarbon testing requirements this coating system has an advantage because it is comprised of 100 percent solids (no solvents). Currently, all water tanks owned and operated by NYS are required to use this system when recoating. It is anticipated that NYS (as well as Rhode Island and Massachusetts) will require this system exclusively in the future.

In general, interior coatings can be difficult to apply and cure due to the need to maintain a level of humidity in the tank. The two-coat system is moisture cured, requiring a humidity range of 40 to 85 percent. The two-coat system typically requires 2 to 3 days for curing which would result in less downtime of the Tank when compared to the three-coat system. Another advantage of this option is that the primer coat provides additional protection in areas of exposed bare metals because it is a zinc rich product. It is also important to note that this coating system can accept spot coating in the future instead of a full removal, which would be required with a three coat system.

Although a relatively new product, this coating system is anticipated to have an increased life expectancy of 40 percent compared to the three-coat system due to a stronger bond of coating to existing surfaces and material flexibility. The primary disadvantage of the two-part coating system is the increase in capital cost when compared to the three-coat system.

2.2.3 MAINTENANCE OF TANK INTERIOR

As previously discussed, the AWWA recommends that potable water storage tanks be inspected every 3 to 5 years of service. Based on current available information, coating system Manufacturer representatives have indicated that the two-coat system is estimated to last approximately 30 years. The life expectancy of the three coat system is estimated to be 20 years based on documented history and experience of consulted paint manufacturers. As recommended in the CRA Memo, for either coating scenario, a cathodic protection system would also increase the duration of the interior coating; the cathodic protection system will require maintenance every 10 years consisting of anode replacement at an approximate cost of $5,000.

2.2.4 INTERIOR TANK RECOATING COST SUMMARY

Based on the above discussion, CRA has prepared the following cost table associated with the recoating of the Tank interior. The following assumptions were used in the preparation of Table 2:

- Maintenance for a period of 30 years
- Two-coat system will last approximately 30 years (recoating after 30 years is not included)
- Three-coat system will be reapplied in year 20
- Updates to cathodic protection will occur every 10 years (cost does not include cathodic protection in year 30)
- 2 percent inflation and 5 percent effective rate of return
- Tank repairs totaling $61,000 include replacement of interior ladder ($3,000), applying pit filling material ($15,000), spot welding pits in steel plates ($3,000), and spot cleaning and recoating interior column ($40,000).

TABLE 2

Interior Tank Recoating Cost Summary

	Two-coat System	*Three-coat System*
Tank Repairs	$61,000	$61,000
Coating System	$185,000	$160,000
Cathodic Protection	$20,000	$20,000
Construction Costs	**$266,000**	**$241,000**
Contingency (35%)	$93,100	$84,400
Total Capital Costs	**$359,100**	**$325,400**
Present Worth of Maintenance	$6,500	$188,800
Life-cycle Cost	**$365,600**	**$514,200**

Cathodic protection system maintenance and recoating of the two-coat system at year thirty are not included in the maintenance costs because it is assumed after thirty years the Tank will require replacement.

If the City elects to rehabilitate the existing Tank CRA recommends the two-coat interior rehabilitation based on maintenance costs and anticipated longevity of the coating system. Additionally, the two-coat system can accept spot recoating (unlike the three-coat system) which will allow for less costly maintenance of the system.

2.3 TANK REHABILITATION RECOMMENDATIONS

CRA has determined that the exterior and interior of the Thompson Park Water Tank are in need of recoating due to identified physical deterioration. The advantages and disadvantages of the exterior and interior rehabilitation options are discussed below.

The advantages and disadvantages of the exterior coating options include:

1. Full exterior recoating
   a. Disadvantage
      - Higher capital costs
      - Longer time out of service (compared to the partial)

b. Advantage
    - The entire Tank is protected for the duration of the coating life

2. Partial exterior recoating
    a. Disadvantages
        - Requires full encapsulation and associated costs despite smaller scope
        - Potential failure to recoat due to alkyds in existing coating
        - Full recoat required after 15 years
        - Advantage
        - Lower capital costs

On the basis of lower risk, lower maintenance cost and lower life-cycle costs CRA recommends a full exterior recoating.

The advantages and disadvantages of the interior coating options include:

1. Two-coat system
    a. Disadvantage
        - Slightly higher capital cost
    b. Advantages
        - Minimal VOCs
        - Shorter application period and Tank downtime
        - Longer life expectancy of coating and lower maintenance costs
        - Spot repairs to the coating system can be made
2. Three-coat system
    a. Disadvantages
        - Potential for VOCs/solvents in water
        - Longer application period and Tank downtime
        - Shorter coating life expectancy which leads to higher maintenance costs
        - Coating system cannot accept spot painting
    b. Advantage
        - Lower capital cost

The difference in capital costs for the interior recoating systems is negligible when compared to the maintenance savings of the two-coat over three-cost system. The two-coat system is the better overall coating system providing the City with several advantages.

Therefore, when considering rehabilitation of the existing welded steel Tank, CRA recommends that the City invest in the full exterior recoating and two-coat interior

recoating. This will provide the City with the best solution to the long term duration and service of their existing water Tank. Table 3 below summarizes the costs of the recommended tank rehabilitation option.

TABLE 3

Recommended Tank Rehabilitation Cost Summary

Cost Item	*EXTERIOR REHABILITATION: Full Exterior Recoating*	*INTERIOR REHABILITATION: Two-coat System*	*Total Recommended Tank Rehabilitation*
Construction Costs	**$410,400**	**$266,000**	**$676,400**
Contingency (35%)	$143,600	$93,100	$236,700
Total Capital Costs	**$554,000**	**$359,100**	**$913,100**
Present Worth of Maintenance	$358,700	$6,500	$365,200
Life-cycle Cost	**$912,700**	**$365,600**	**$1,278,300**

3.0 REPLACEMENT OF WATER TANK

Due to the significant costs associated with recoating of the exterior and interior of the Thompson Park Water Tank, the City requested an evaluation of two tank replacement options. The existing Tank is welded steel (AWWA D-100 Standard) (see Figure 5) which is still manufactured and is one of the replacement options analyzed in this report. The second replacement option evaluated is a glass lined tank (AWWA D-103 Standard), which is a newer technology. For the purposes of this report, it is assumed that the new elevated water tank has the same design basis as the existing Tank including volume, height, and location in water system. It is anticipated that the new tank will be constructed adjacent to the existing Tank which will allow the existing Tank to remain in service during a significant portion of the construction period.

The following sections discuss the advantages and disadvantages of the two tank types, the estimated construction, maintenance, and life cycle costs, as well as the anticipated maintenance requirements.

3.1 WELDED STEEL TANK (IN-KIND REPLACEMENT)

A welded steel elevated water storage tank, similar to the existing Tank, has been evaluated as one of the two tank replacement options (Figure 6). In order to gather information on this type of tank, CRA consulted with Chicago Bridge and Iron (CB&I). CB&I is one of the world's leading steel tank manufacturers who reportedly has built more than 25,000 elevated water tanks, including the existing Thompson Park Water Tank. Included in Appendix C is CB&I's brochure for a standard all welded-steel water storage tank (see Figure 4 for an image of this tank type).

The installation of the new tank will required initial coating of the exterior and interior after installation; for the purposes of this evaluation these coatings are assumed to be similar to those recommended in the tank rehabilitation option. The construction of the tank would take approximately one year from the date of contract award.

As part of this evaluation CRA investigated the use of a composite steel tank. A composite steel tank consists of a welded steel tank on a reinforced concrete pedestal. A review of this tank type found that the smallest standard size available is 500,000 gallons which exceeds the required capacity of the existing tank by 100 percent (250,000 gallons). This type of tank was investigated because of the anticipated lower long-term maintenance costs associated with the concrete column (no coating system on column). While this type of composite steel tank is not applicable for the City, there is an

alternative composite tank which has the benefits of lower maintenance requirements for the column and is available in a 250,000 gallon size. This type of water storage tank consists of a glass lined tank bowl (glass fused to steel) on a concrete pedestal and is discussed in the following section.

Figure 5

Current CB& I Thompson Park Water Tank

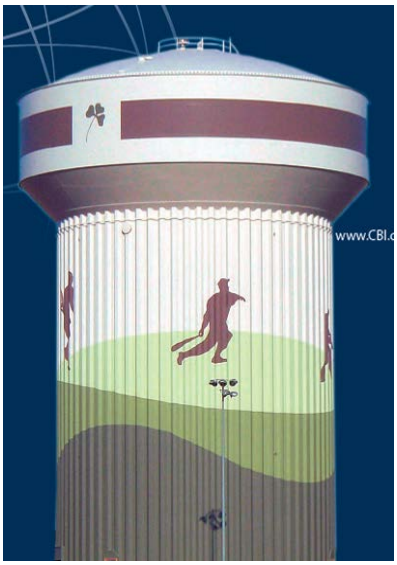

Figure 6

Proposed Welded Steel (CB & I) Water Tank

3.2 GLASS-LINED TANK

The water industry has recently developed a new style of elevated tank. This tank is a composite tank design comprised of a steel water tank with an interior of fused glass on top of a reinforced concrete pedestal (see Figure 7). The steel panels are fused with glass on the inside surface and edges and are powder coated, instead of the traditional paint coating, on the outside. The powder coating does not need to be removed and reapplied over time. Glass-lined tanks are currently being used in a variety of storage capacities. The tanks are constructed in panels delivered to and assembled on the site. The anticipated construction duration of a 250,000 gallon glass lined tank is estimated to be 9 months.

Although similar in design and size as the steel tank, the major advantage of this tank system is the fused glass interior and powder coated exterior. Therefore, there is no need for recoating the tank. The estimate for the glass-lined tank includes a cathodic protection system and therefore, does not represent an additional cost. The

manufacturer, Statewide Aquastore Inc., provided CRA with a budgetary cost estimate and information for replacing the Thompson Park Water Tank; this information is provided in Appendix D.

Figure 7

Glass lined bolted steel tank

3.3 MAINTENANCE OF NEW TANKS

If the City chooses to construct a new tank, both tank types will require maintenance during compliance with AWWA recommended inspection schedule of every 3 to 5 years. The welded steel tank will require exterior and interior recoating similar to the discussions presented in Section 2. It can be assumed that the exterior coating will need to be recoated in 15 years, if the two-coat interior system is used with the new welded steel tank this will provide an interior coating life of 30 years. The glass-lined tank does not require exterior recoating; therefore, it has a lower maintenance cost when compared to the welded steel tank. If a glass lined bolted steel panel becomes compromised, the compromised panel can be independently removed and replaced.

CRA recommends the installation of a cathodic protection system with the new welded steel tank; the glass-lined tank is provided with a cathodic protection system. Both types of tank will require anode replacement of the cathodic protection system every 10 years; this replacement is estimated to cost approximately $5,000.

3.4 TANK REPLACEMENT COST SUMMARY

Based on the above discussion, CRA has prepared the following cost table associated with the replacing the Tank. These estimates assume that the site of the tank will remain generally in the same location and access to the site with cranes and other equipment will be allowed eliminating premium costs for non-standard construction practices. It is assumed that the new tank would be constructed adjacent to the existing Tank in Thompson Park and that the existing Tank will remain in service for the construction period until the new tank is ready to be put in service. Otherwise, the total construction period would represent downtime for the existing Tank. The following assumptions were used in the preparation of Table 4:

- 20 percent of tank costs for site work including removal or reconfiguration of piping and modification of site features
- $20,000 for removal of the existing Tank (assumes that the demolition contractor is permitted to salvage and sell materials from the Tank)
- Maintenance for a period of 30 years
- Recoating of welded steel interior after 15 years (recoating after 30 years is not included)
- Both options include maintenance of the cathodic protection every 10 years (cost does not include cathodic protection in year 30)
- 2 percent inflation and 5 percent effective rate of return

TABLE 4

Tank Replacement Cost Summary

Item	*Welded Steel Tank*	*Glass Lined Tank*
Tank	$800,000	$835,000
Site Work (20%)	$160,000	$160,000
Cathodic Protection	$20,000	$0*
Demolition of Existing Tank	$20,000	$20,000
Total Construction Cost	**$1,000,000**	**$1,015,000**
Contingency (35%)	$350,000	$355,300
Total Capital Cost	**$1,350,000**	**$1,370,300**
Present Worth of Maintenance	$365,200	$6,500
Life Cycle Cost	**$1,715,200**	**$1,376,800**

*Included by manufacturer

3.5 TANK REPLACEMENT RECOMMENDATIONS

As part of the evaluation of possible replacement options for the Thompson Park Water Tank, CRA evaluated two tank types: welded steel tank and a composite bolted steel glass-lined tank. The advantages and disadvantages of each option include:

1. Welded steel tank
   a. Disadvantage
      - Higher maintenance and associated costs
   b. Advantages
      - Lower capital costs
2. Glass-lined tank
   a. Disadvantage
      - Higher capital costs
   b. Advantage
      - Lower maintenance costs with no need for recoating during the life of the tank

Although the glass-lined tank has a slightly larger capital cost, the long-term maintenance of the tank is significantly lower than the welded steel. If the City determines that a new tank is more desirable to the rehabilitation of the existing Tank, then CRA recommends that the City take advantage of the new technology of the glass-lined tank.

4.0 REHABILITATION AND REPLACEMENT SUMMARY AND RECOMMENDATIONS

Following CRA's initial inspection of the Thompson Park Water Tank, the City determined that additional evaluation of options and was required to make an informed decision about tank upgrades. The results and recommendations in this section are based on the assumption that the existing Tank volume is adequate and would match existing water height, volume and location.

Table 5 summarizes the costs of the Tank rehabilitation and replacement options previously recommended in this report.

TABLE 5

Recommended Rehabilitation and Replacement Cost Comparison

Cost Item	*Tank Rehabilitation**	*Tank Replacement, Glass Lined Tank*
Total Capital Cost	**$913,100**	**$1,370,300**
Present Worth of Maintenance (30 years)	$365,200	$6,500
Total Life Cycle Cost	**$1,278,300**	**$1,376,800**

* Includes a full exterior recoat and two-coat interior system

A final decision regarding the future of the Tank should be based upon the findings of the Tank design verification and available project funds. However, CRA offers the following preliminary recommendations based on results of the work performed to date:

1. Should the City decide to recoat the existing Tank, CRA recommends recoating the entire interior with a two-coat system and exterior of the Tank as discussed in CRA's Memo.

2. If the decision is made to replace the Tank, CRA recommends replacement with a bolted, glass fused to steel tank on a concrete pedestal.

The bolted, glass fused to steel tank will also provide other environmental and social benefits such as limiting hazardous material transport to the adjacent playground and surrounding park as well as minimizing tank recoating and out of service requirements.

5.0 NEXT STEPS

If the City elects to rehabilitate the existing Thompson Park Water Tank, CRA recommends preparing a final design based on the information provided in this report and the previous Tank Inspection Report, followed by the development of Contract Documents, Bidding and Construction. If the City elects to build a new water tank, CRA recommends preparing an engineering report that evaluates the services area and associated design basis of the new tank before proceeding with the tank design, Contract Document preparation, Bidding and Construction. The original tank was designed in 1976 and it is likely that some of the service area requirements have changed since that time. For example, it is understood that the City has expanded its service area over the years through interconnections to surrounding municipalities and Fort Drum. It is also understood that system improvements have been or are in planning, design or construction stages which may affect the future needs of the Thompson park water tank.

An engineering report will provide a tank design verification step to determine if the existing tank design is appropriate for the new service area with respect location, volume, height and it is in fact is still needed. The findings of an engineering report could impact the conclusions of this report and may provide an opportunity for cost savings to the City.

APPENDIX A

CRA MEMO OF OCTOBER 24, 2012

CONESTOGA-ROVERS
& ASSOCIATES

State Tower Building, Suite 220
109 South Warren Street
Syracuse, NY 13202
Telephone: (315) 233-4270 Fax: (315) 425-4050
www.craworld.com

MEMORANDUM

TO:	Michael Sligar	REF. NO.:	630957
FROM:	Eric Haslam, James Milks, Jason Davenport/ck/001	DATE:	October 24, 2012
CC:			
RE:	**City of Watertown Inspection and Evaluation of Thompson Park Water Tank Summary of Site Visit Conducted September 12, 2012**		

The purpose of this document is to summarize the findings of the site visit conducted on September 12, 2012 for the City of Watertown Water Department (City). The primary objective of the visit was to perform a visual, nondestructive inspection of the 250,000-gallon elevated welded steel water tank at Thompson Park. During the visit, City Water Department personnel provided access and assistance while CRA performed the inspection.

EXTERIOR FINDINGS

Based on the field visit to the tank, an inspection was conducted of various exterior components and tank appurtenances. The manways, roof hatch, vent assembly and tank overflow line meet current AWWA and OSHA standards. No work will be required on these components.

The tank has a concrete ring wall foundation. The foundation and grout pad appear to be in sound structural condition. Sections of spalled and missing concrete were identified at the door entrance openings. There are signs of deterioration of the caulking around the tank where the fluted riser column meets the grout pad.

The exterior entrance doors into the fluted column show signs of deterioration and should be replaced.

The column vents near the top of the column have been painted over and do not provide the necessary ventilation into the tank column.

The roof hatches have a hasp for locking the hatches; however, locks were not installed on the hatches at the time of inspection.

The access hatch from the access tube to the tank roof is hinged but does not have a mechanism to assist in closing the hatch once one enters the access tube.

The paint coating system on the exterior tank surface shows signs of fading, chalking, and areas of spot corrosion. The exterior coating system on sections of the tank roof have been weathered and worn off

exposing bare metal and primer. There are areas of spot corrosion on the exterior of the tank column, roof, hatches, vent, tank overflow line, anchor bolt, and other tank appurtenances.

Paint coating thickness measurements were obtained at the tank roof. Readings taken on the exterior coating system on the roof indicated a coating thickness between 0.85 mils and 6.6 mils. The average coating thickness is approximately 4.2 mils on the tank roof. Paint coating thickness measurements were also obtained in the areas of the tank roof where the coating has been weathered and the primer is exposed. These measurements indicated a primer coating thickness between 0.80 mils and 1.35 mils.

Photographs of the tank exterior were taken during the inspection and are included in Appendix A.

Paint samples were collected for the exterior coating and were analyzed for lead, chromium, and cadmium content. Results of the laboratory testing are included in Appendix B.

Original construction drawings from Chicago Bridge & Iron Company (CBI) are included in Appendix C.

INTERIOR FINDINGS

The interior of the tank fluted column, interior ladders, balcony, riser pipe, hatches, and associated tank appurtenances appear to be in sound structural condition. The interior ladders within the tank flute and within the dry riser have safety climb devices.

Structural steel supports, stabilization rods, welds and seams, and dry riser assembly appear to be in sound structural condition.

The paint coating system on the interior of the tank column, condensate ceiling, balconies, platforms, dry riser, ladder, and structural components show signs of fading, and areas of spot corrosion. Generally, the coating system in these areas appears to be in sound condition.

The interior of the tank bowl shows signs of major coating loss, corrosion, and pitting in the steel plates. Major corrosion was identified in lower bowl area of the tank including the tank cone and continuing up to the intersection with the tank walls. Major corrosion was identified on the exterior of the tank dry riser and ladder within the wet area of the tank bowl. The remaining sections of the interior of the tank wall show signs of coating loss and spot corrosion. The underside of the tank roof and structural steel support beams show signs of coating loss and spot corrosion but appear to be in sound structural condition.

Although the interior of the tank fill/drain riser pipe could not be inspected, it should be anticipated that the interior of this pipe may exhibit the same corrosion conditions as the lower section of the interior of the tank bowl.

Relative depth measurements of the steel pits were obtained in spot areas within the tank bowl. These depth measurements were compared to the steel plate thickness shown on the original tank construction drawings and are presented as follows:

Tank Ring location	Steel Plate Thickness	Average Depth of Pitting
Ring 1 – Bottom of bowl	5/16″	1/8″ to 3/16″
Ring 2 – Next ring up	5/16″	3/16″ to 1/4″
Ring 3 – Connection to column	2″	1/8″ to 3/16″
Ring 4 - Next ring up	0.573″	1/8″ to 3/16″
Ring 5 – Connection to side walls	7/16″	1/8″ to 3/16″
Ring 6 – Lower side wall	5/16″	None
Ring 7 – Upper side wall	5/16″	None

The presence of pits in the steel plates as identified above can be addressed with the application of a pit filler material and/or spot welding prior to the installation of a new interior coating system.

Paint coating thickness measurements were obtained at various areas within the interior of the tank column and tank bowl. The following coating thickness measurements were obtained during this inspection:

- Interior of fluted column: Coating thickness between 3.0 mils and 5.5 mils with an average thickness of 4.0 mils.
- Interior tank floor: Coating thickness between 5.5 mils and 6.8 mils with an average thickness of 6.3 mils (20 readings).
- Interior tank cone: Coating thickness between 6.3 mils and 18.2 mils with an average thickness of 7.8 mils (22 readings).
- Interior tank walls: Coating thickness could not be measured.
- Wet side of tank riser below water line: Coating thickness between 7.8 mils and 16.4 mils with an average thickness of 8.1 mils (15 readings).
- Wet side of tank riser above water line: Coating thickness between 4.0 mils and 4.8 with and average thickness of 4.2 mils (20 readings).

Photographs of the tank interior and appurtenances were taken during the inspection and are included in Appendix A.

Paint samples were collected for the exterior coating and were analyzed for lead, chromium and cadmium content. Results of the laboratory testing are included in Appendix B.

Original construction drawings from Chicago Bridge & Iron Company (CBI) are included in Appendix C.

There is no cathodic protection system installed within the interior of the tank vessel.

RECOMMENDATIONS

Tank Exterior

Based on the field inspection and this information outlined above, the following work and repairs are recommended on the tank exterior and components:

- Complete repairs to the concrete ring wall foundation at the door entrance openings where the spalled areas of concrete have been identified using an approved concrete patching material.

- Remove caulking around perimeter of tank where the fluted column meets the grout pad. Clean area and replace with approved caulking material and sealant backer rod where necessary.
- Remove exterior entrance doors in tank column and replace with new door assemblies including new hardware and lock sets.
- Remove coatings applied over the column vents to clear the vent openings and allow ventilation into the tank column, or replace vents with new vent assemblies. This work should be completed along with the exterior tank coating system.
- Install locks on all hatches and tank openings that have hasps available and are not presently locked for security measures.
- Install a hold open arm mechanism on the access hatch from the access tube to the tank roof to limit the opening swing of the access hatch and assist in closing the hatch once the person enters the access tube.
- The sample analysis of the exterior tank coating system indicated the presence of lead, cadmium and chromium in the existing paint coating system. Results of the laboratory testing are included in Appendix B. Based on these findings and the results of the exterior inspection, the following options may be considered to address the exterior coating system on the tank:

  a. Conduct a full exterior removal of the coating system by blast methods to SSPC SP-6 (Commercial Abrasive Blast) standards. This would entail a full Class "A" containment system on the exterior of the tank to eliminate the escape of removed coating materials. Completion of this work is recommended to be conducted in the summer months to limit the use of heaters and dehumidification systems necessary to properly cure the new paint system. Install a new coating system on all surfaces of the tank exterior. A coating system consisting of three coats (zinc rich primer, epoxy, urethane system) is recommended for the tank exterior as follows:

     - Full prime coat zinc rich primer applied at a 2.5 to 3.5 mils D.F.T.
     - Full intermediate coat epoxy applied at a 2.0 to 3.0 mils D.F.T.
     - Full finish coat of urethane applied at a 2.0 to 3.0 mils D.F.T.

     The minimum final thickness of the exterior paint system shall be 8.0 mils D.F.T.

  b. Conduct a full exterior removal of the coating system on the tank vessel roof and side walls using blast methods to SSPC SP-6 (Commercial Abrasive Blast) standards. This would entail a full Class "A" containment system on the exterior of the tank to eliminate the escape of removed coating materials. The new coating system is recommended above. The remainder of the tank exterior column may power washed and spot cleaned using a vacuum-blast system in areas were corrosion and loss of coating system is present. Touch-up priming and one full coat of urethane on the entire tank exterior surface could be performed to maintain the remainder of exterior coating system.

     This option would be less cost than full removal and re-coating of the entire tank exterior; however, the remaining exterior coating system would still contain lead, cadmium and chromium and would require complete encapsulation and removal at a future date. Since this option requires full encapsulation to remove the coating system on the tank vessel, CRA recommends removal and application of a complete new coating system on the tank exterior at the same time.

Tank Interior

Based on the field inspection and this information outlined above, the following work and repairs are recommended on the tank interior and components:

- Replace existing interior ladder in tank vessel attached to the outside of the dry riser. Ladder should be replaced with a new steel ladder meeting OSHA standards. A safety climb device should be installed on the new ladder assembly.
- The sample analysis of the interior tank coating system indicated the presence of lead, cadmium and chromium in the existing paint coating system. Results of the laboratory testing are included in Appendix B. Based on these findings and the results of the interior inspection, it is recommended that the existing coating system within the interior of the tank vessel be removed and replaced with a new coating system. The following options are available to address the interior tank coating system:

  a. Interior of tank vessel, interior of tank cone, interior of tank drain/fill line: Conduct a full interior removal of the coating system using blast methods to SSPC-SP-10 (near White Metal Abrasive Blast). Following removal of existing coating system and completion of pit filling and/or spot welding, a new coating system conforming to AWWA D102 specifications should be installed on the interior surfaces.

     The following coating systems are available for installation on the interior of the tank surfaces and conform to AWWA D102 specifications:

     1. Three coat epoxy system consisting of the following:

        - Full prime coat of epoxy installed at a 3.0 to 5.0 mils D.F.T.
        - Full intermediate coat of epoxy applied at a 4.0 to 6.0 mils D.F.T.
        - Full finish coat of epoxy applied at a 4.0 to 6.0 mils D.F.T.
        - Stripe coat installed at plate seams and joints of epoxy applied at a 50 to 60 mils D.F.T.
        - The minimum final thickness of the interior paint system shall be 14.0 mils D.F.T. on tank plate surfaces and 69.0 mils on stripe coat areas.

        The three coat system use coatings with 68% solids, and the remaining 30% is solvent that must evaporate during curing which requires a controlled curing process of 2-3 weeks to ensure that there are no VOC's present when the tank is returned to service. Dehumidification within the tank interior is necessary to maintain a relative humidity of 40% prior to installation of the coating system and during the coating curing process.

     2. Two coat system consisting of the following:

        - Full prime coat of Aromatic Urethane, Zinc Rich installed at a 2.5 to 3.5 mils D.F.T.
        - Stripe coat of Polyamidoamine Epoxy installed at a 2.0 to 3.0 mils D.F.T.
        - Full finish coat of Modified Polyamine Epoxy installed at a 20 to 30 mils D.F.T.
        - The minimum final thickness of the interior paint system shall be 23.0 mils D.F.T. on tank plate surfaces and 25.0 mils on stripe coat areas.

        The two coat system use coatings with 100% solids. Since these coatings do not contain any solvents, the curing time is reduced to a 2-3 day period and there is less concern for potential VOCs. The prime coat material is a zinc rich product that provides additional protection for bare metal. This material is a moisture cured product and as a result, the level of dehumidification within the tank interior is reduced.

The three coat epoxy system referenced above is commonly used for re-coating tank interiors; however, the two coat systems are gaining popularity in New York State in recent years due to the stringent requirements for VOCs.

The three coat epoxy system is initially less expensive to install than the two coat system; however, the 2-coat system has other advantages of increased life expectancy, faster curing times, and elimination of the concern for VOCs.

CRA recommends the use of a 2-coat system; however, final selection of a specific coating system should be done during pre-design phase based upon discussions with the City and consideration of available project funding.

b. Interior of tank column, interior balconies, piping and appurtenances: The existing coating system appears to be in sound condition with the exception of some areas of minor coating loss and spot corrosion. It is recommended that these areas be power washed, spot cleaned using vacuum- blast and primed prior to final re-coating Following this work, one finish coat of epoxy would be applied on all surfaces of interior of tank column, balconies, piping, and appurtenances as specified above.

- We have investigated an option for installation of a cathodic protection system in the interior of the tank due to the corrosion and pitting identified within the interior of the tank vessel. A fixed suspended anode type system is recommended for this installation after the completion of the tank re-coating. This type of system is recommended due to the potential for tank icing in the winter months. Installation of a cathodic protection system would provide an additional level of protection in the event of future coating loss and corrosion conditions.

CONSTRUCTION COST ESTIMATE

Based on the information outlined above, the following construction cost estimate was prepared for the recommended work associated with the tank rehabilitation:

Description	**Estimated Cost**
Tank Exterior	
• Repairs to concrete ring wall foundation	$ 600
• Removal of caulking and installation of new caulking	$ 2,000
• Removal of entrance doors and installation of new doors	$ 7,000
• Clean and remove paint coating at tank column vents	Cost included in tank coating
• Install hold open arm mechanism on tank roof hatch	$ 800
• Full exterior coating removal with encapsulation and complete exterior re-coat system	$ 400,000
Total Cost Exterior	$ 410,400
Tank Interior	
• Removal and replacement of interior vessel tank ladder	$ 3,000
• Apply pit filling material and surfacing	$15,000
• Full interior coating removal in tank vessel and riser pipe and complete interior re-coat system (2-coat system)	$ 185,000
• Alternate for full interior coating removal in tank vessel and riser pipe and complete interior re-coat system (3-coat epoxy system)	($ 160,000)
• Spot weld of pits in steel plates	$ 3,000
• Spot clean and re-coat interior of tank column and appurtenances	$ 40,000
Total Cost Interior	$ 246,000
Cathodic Protection System	
• Install Cathodic Protection System – Complete	$ 20,000
Total Cost Cathodic Protection System	$ 20,000
Sub-Total	$ 646,400
35% CELA Contingency	$ 238,600
Total Estimated Cost	$ 915,000

If the 3-coat epoxy interior painting system is selected for use on this project, the total estimated cost for this project would decrease to $879,000.

APPENDIX A

PHOTOGRAPHS

1 - Underside of Condensate Roof

2 - Underside of Condensate Roof

3-Tank Column Side Wall / Condensate Roof

4-Tank Column Anchor Bolt Connection

630957 (1)

5-Door Opening at Tank Column

6 -Caulking at Tank Column and Grout Pad

7 -Spalled Concrete Area at Door Opening

8 -Tank Overflow Lines at Exterior

630957 (1)

9 -Tank Elevation

10 -Fill/Drain and Overflow Lines

11 -Balcony Platform inside of Tank Column

12 -Balcony Platform Hatch

630957 (1)

13 -Balcony Platform Hatch

14 -Tank Vessel at Column Connection

15 -Interior Tank Column and Column Vent

16 -Interior Tank Column

17 -Interior of Tank Column at Bottom of Tank Vessel

18 -Balcony Platform inside of Tank Column

19 -Exterior of Tank Roof

20 -Tank Roof Vent

630957 (1)

21 -Tank Roof Access Hatch

22 -Ladder at Interior of Tank Dry Riser Tube

23 -Typical Corrosion at Lower Area of Tank Vessel

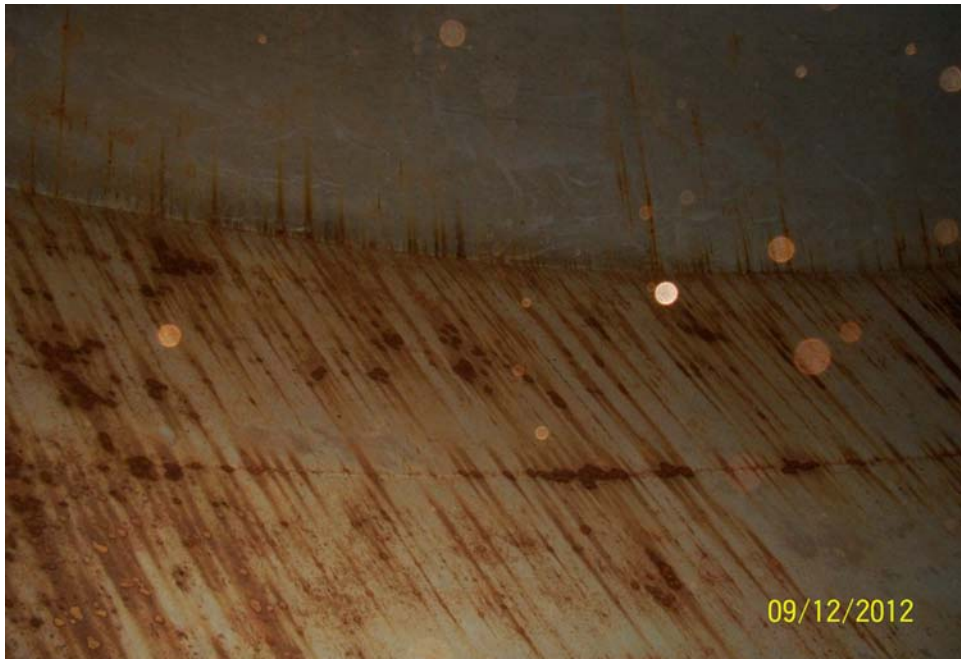

24 -Typical Corrosion at Interior of Tank Vessel at Side Walls

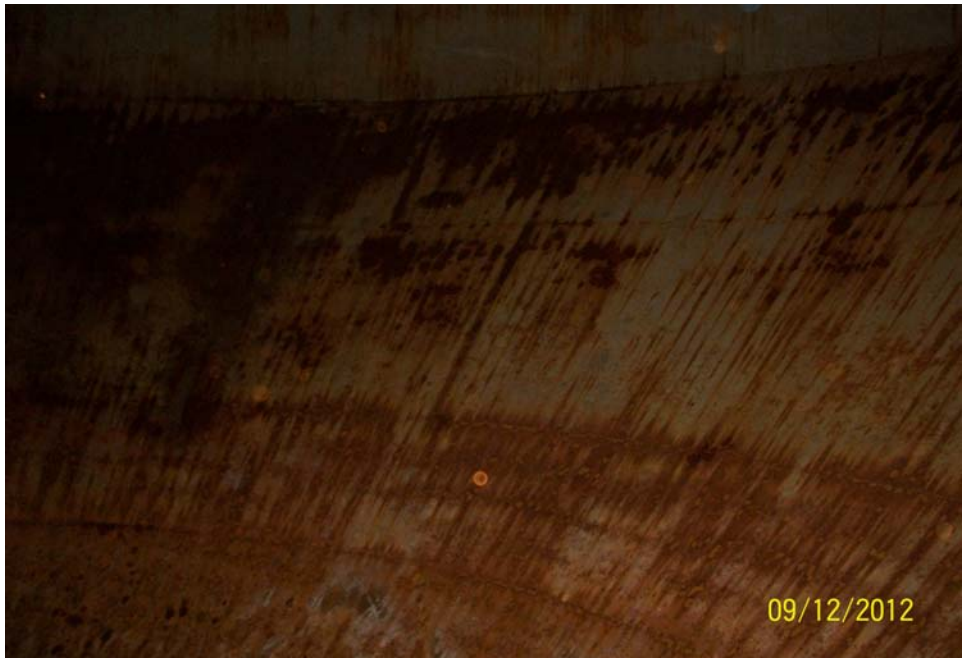

25 -Typical Corrosion at Lower Area of Tank Vessel

26 -Typical Corrosion at Pitted Steel Plate Locations

27 -Interior of Tank Vessel and Outside of Dry Riser Tube

28 -Interior of Tank Vessel and Outside of Dry Riser Tube

630957 (1)

29 -Interior of Tank Vessel Looking Up

30 -Tank Overflow Weir Box

31 -Underside of Tank Vessel Roof Support Beam

32 -Underside of Tank Vessel Roof Support Beam

630957 (1)

33 -Underside of Tank Vessel Roof Support Beam

APPENDIX B

PAINT SAMPLE RESULTS

GALSON LABORATORIES

Jason Davenport
Conestoga Rovers
109 South Warren Street
Suite 220
Syracuse, NY 13202

September 27, 2012

DOH ELAP# 11626
AIHA # 100324

Account# 25347

Login# L274232

Dear Jason Davenport:

Enclosed are the analytical results for the samples received by our laboratory on September 20, 2012. All test results meet the quality control requirements of AIHA and NELAC unless otherwise stated in this report. All samples on the chain of custody were received in good condition unless otherwise noted.

Results in this report are based on the sampling data provided by the client and refer only to the samples as they were received at the laboratory. Unless otherwise requested, all samples will be discarded 14 days from the date of this report.

Current Scopes of Accreditation can be viewed at www.galsonlabs.com in the accreditations section under the "about Galson" tab.

Please contact Charlene Moser at (888) 432-5227, if you would like any additional information regarding this report.

Thank you for using Galson Laboratories.

Sincerely,

Galson Laboratories

Mary G Unangst

Mary G. Unangst
Laboratory Director

Enclosure(s)

GALSON LABORATORIES

LABORATORY ANALYSIS REPORT

6601 Kirkville Road
East Syracuse, NY 13057
(315) 432-5227
FAX: (315) 437-0571
www.galsonlabs.com

Client : Conestoga Rovers
Site : Thompson Park Water Tank
Project No. : Thompson Park Water Tank

Date Sampled : 12-SEP-12
Date Received : 20-SEP-12
Date Analyzed : 24-SEP-12 - 25-SEP-12
Report ID : 753099

Account No.: 25347
Login No. : L274232

Client ID : 091212-JM-01 **Lab ID : L274232-1**
Date Sampled : 09/12/12 **Date Analyzed : 09/24/12**

Parameter	LOQ mg/kg	Total ug	Conc mg/kg	Percent %
Cadmium	4.9	<0.50	<4.9	<0.00049
Chromium	49.	20	200	0.020
Lead	24.	1200	12000	1.2

COMMENTS: Please see attached lab footnote report for any applicable footnotes.

Collection Media : Paint

Submitted by: JAM
Approved by : keg
Date : 26-SEP-12 NYS DOH # : 11626
QC by: Karen Becker

< -Less Than	mg -Milligrams	m3 -Cubic Meters	kg -Kilograms
> -Greater Than	ug -Micrograms	l -Liters	NS -Not Specified
NA -Not Applicable	ND -Not Detected	ppm -Parts per Million	LOQ-Limit of Quantitation

Field sampling was not performed by Galson. Galson presents results based on sampling data provided by clients.

LABORATORY ANALYSIS REPORT

6601 Kirkville Road
East Syracuse, NY 13057
(315) 432-5227
FAX: (315) 437-0571
www.galsonlabs.com

Client : Conestoga Rovers
Site : Thompson Park Water Tank
Project No. : Thompson Park Water Tank

Date Sampled : 12-SEP-12
Date Received : 20-SEP-12
Date Analyzed : 24-SEP-12 - 25-SEP-12
Report ID : 753099

Account No.: 25347
Login No. : L274232

Client ID : 091212-JM-02 **Lab ID : L274232-2**
Date Sampled : 09/12/12 **Date Analyzed : 09/24/12**

Parameter	LOQ mg/kg	Total ug	Conc mg/kg	Percent %
Cadmium	5.0	<0.50	<5.0	<0.00050
Chromium	50.	30	300	0.030
Lead	25.	6600	66000	6.6

COMMENTS: Please see attached lab footnote report for any applicable footnotes.

Collection Media : Paint

Submitted by: JAM
Approved by : keg
Date : 26-SEP-12 NYS DOH # : 11626
QC by: Karen Becker

< -Less Than	mg -Milligrams	m3 -Cubic Meters	kg -Kilograms
> -Greater Than	ug -Micrograms	l -Liters	NS -Not Specified
NA -Not Applicable	ND -Not Detected	ppm -Parts per Million	LOQ-Limit of Quantitation

Field sampling was not performed by Galson. Galson presents results based on sampling data provided by clients.

LABORATORY ANALYSIS REPORT

6601 Kirkville Road
East Syracuse, NY 13057
(315) 432-5227
FAX: (315) 437-0571
www.galsonlabs.com

Client : Conestoga Rovers
Site : Thompson Park Water Tank
Project No. : Thompson Park Water Tank

Date Sampled : 12-SEP-12
Date Received : 20-SEP-12
Date Analyzed : 24-SEP-12 - 25-SEP-12
Report ID : 753099

Account No.: 25347
Login No. : L274232

Client ID : 091212-JM-03 **Lab ID : L274232-3**
Date Sampled : 09/12/12 **Date Analyzed : 09/24/12**

Parameter	LOQ mg/kg	Total ug	Conc mg/kg	Percent %
Cadmium	4.7	<0.75	<7.1	<0.00071
Chromium	47.	31	290	0.029
Lead	24.	9.4	88	0.0088

COMMENTS: Please see attached lab footnote report for any applicable footnotes.

Collection Media : Paint

Submitted by: JAM
Approved by : keg
Date : 26-SEP-12 NYS DOH # : 11626
QC by: Karen Becker

< -Less Than	mg -Milligrams	m3 -Cubic Meters	kg -Kilograms
> -Greater Than	ug -Micrograms	l -Liters	NS -Not Specified
NA -Not Applicable	ND -Not Detected	ppm -Parts per Million	LOQ-Limit of Quantitation

Field sampling was not performed by Galson. Galson presents results based on sampling data provided by clients.

LABORATORY FOOTNOTE REPORT

6601 Kirkville Road
East Syracuse, NY 13057
(315) 432-5227
FAX: (315) 437-0571
www.galsonlabs.com

Client Name : Conestoga Rovers
Site : Thompson Park Water Tank
Project No. : Thompson Park Water Tank

Date Sampled : 12-SEP-12
Date Received: 20-SEP-12
Date Analyzed: 24-SEP-12 - 25-SEP-12

Account No.: 25347
Login No. : L274232

Unless otherwise noted below, all quality control results associated with the samples were within established control limits.

Unrounded results are carried through the calculations that yield the final result and the final result is rounded to the number of significant figures appropriate to the accuracy of the analytical method. Please note that results appearing in the columns preceeding the final result column may have been rounded in order to fit the report format and therefore, if carried through the calculations, may not yield an identical final result to the one reported.

The stated LOQs for each analyte represent the demonstrated LOQ concentrations prior to correction for desorption efficiency (if applicable).

Unless otherwise noted below, reported results have not been blank corrected for any field blank or method blank.

L274232 (Report ID: 753099):
The Cadmium results are considered accurate to within +/-9.8% based on a 95% confidence interval (k=2). This method has an average recovery of 98.6%. The estimated uncertainty applies to the media, technology, and SOP(s) referenced in this report and does not account for any uncertainty associated with the sampling process.
The Chromium results are considered accurate to within +/-13.3% based on a 95% confidence interval (k=2). This method has an average recovery of 100%. The estimated uncertainty applies to the media, technology, and SOP(s) referenced in this report and does not account for any uncertainty associated with the sampling process.
The Lead results are considered accurate to within +/-7% based on a 95% confidence interval (k=2). This method has an average recovery of 98.6%. The estimated uncertainty applies to the media, technology, and SOP(s) referenced in this report and does not account for any uncertainty associated with the sampling process.
Reported results reflect elemental analysis of the requested metals. Certain compounds may not be solubilized during digestion, resulting in data that is biased low.
SOPs: MT-SOP-5(11), MT-SOP-9(21)
SW846 6010C is referenced for lead data only.
Level of quantitation varies with actual sample mass used for preparation.

!L274232-3 (Report ID: 753099):
Elevated LOQ for Cadmium due to sample matrix interference.

Parameter	Method
Cadmium	mod. OSHA ID-125G/SW846 6010C; ICP PAINT
Chromium	mod. OSHA ID-125G/SW846 6010C; ICP PAINT
Lead	mod. OSHA ID-125G/SW846 6010C; ICP PAINT

< -Less Than	mg -Milligrams	m3 -Cubic Meters	kg -Kilograms
> -Greater Than	ug -Micrograms	l -Liters	NS -Not Specified
NA -Not Applicable	ND -Not Detected	ppm -Parts per Million	

GALSON LABORATORIES
6601 Kirkville Rd
East Syracuse, NY 13057
Tel: (315) 432-5227
888-432-LABS (5227)
Fax: (315) 437-0571
www.galsonlabs.com

☐ New Client?

Client Account No.*: 25347

Report To*: Jason Davenport
State Tower Building, Suite 220
109 South Warren Street
Syracuse, NY 13202

Phone No.*: 315-233-4270
Cell No.:
Email Results to: jdavenport@craworld.com
Email address:

Invoice To*: Jason Davenport
(100)
State Tower Building, Suite 220
109 South Warren Street
Syracuse, NY 13202

Phone No.: 315-233-4270
Email: jdavenport@craworld.com
P.O. No.: Project No. 630957
Credit Card: ☐ Card on File ☐ Call for Credit Card Info.

☐ Samples submitted using the FreePumpLoan™ Program ☐ Samples submitted using the FreeSamplingBadges™ Program

Need Results By:	(surcharge)
☑ 5 Business Days	0%
☐ 4 Business Days	35%
☐ 3 Business Days	50%
☐ 2 Business Days	75%
☐ Next Day by 6pm	100%
☐ Next Day by Noon	150%
☐ Same Day	200%

Site Name: Thompson Park Water Tank Project: Thompson Park Water Tank Sampled by: Jim Milks

Comments:

List description of industry or Process/interferences present in sampling area: Potable water storage

State samples were collected in (e.g., NY): NY

Please indicate which OEL this data will be used for: ☐ OSHA PEL ☐ ACGIH TLV ☐ Cal OSHA ☐ MSHA ☐ Other (specify):

Sample Identification* (Maxmium of 20 Characters)	Date Sampled	Collection Medium	Sample Volume Sample Time Sample Area*	Sample Units*: L, ml,min,in2,cm2,ft2	Analysis Requested*	Method Reference^	Hexavalent Chromium Process (e.g., welding plating, painting, etc.)*
091212-JM-01	09/12/12	Paint Chips	09:15 am		Cadmium, Chromium, Lead	EPA 3050	
091212-JM-02	09/12/12	Paint Chips	09:30 am		Cadmium, Chromium, Lead	EPA 3050	
091212-JM-03	09/12/12	Paint Chips	09:45 am		Cadmium, Chromium, Lead	EPA 3050	

^Galson Laboratories will subsititute our routine/preferred method if it does not match the method listed on the COC unless this box is checked: ☐ Use method(s) listed on COC

For metals analysis: if requesting an analyte with the option of a lower LOQ, please indicate if the lower LOQ is required (only available for certain analytes - see SAG):

For crystalline silica: form(s) of silica needed must be indicated (Quartz, Cristobalite, and/or Tridymite)*:

Chain of Custody	Print Name	Signature	Date/Time
Relinquished by:	Jason Davenport		9/20/12
Received by LAB:	ACostello	ACostello	9/20/12 1308

Samples received after 3pm will be considered as next day's business
* Required fields, failure to complete these fields may result in a delay in your samples being processed.

APPENDIX C

ORIGINAL DRAWINGS FROM
CHICAGO BRIDGE & IRON COMPANY (CBI)

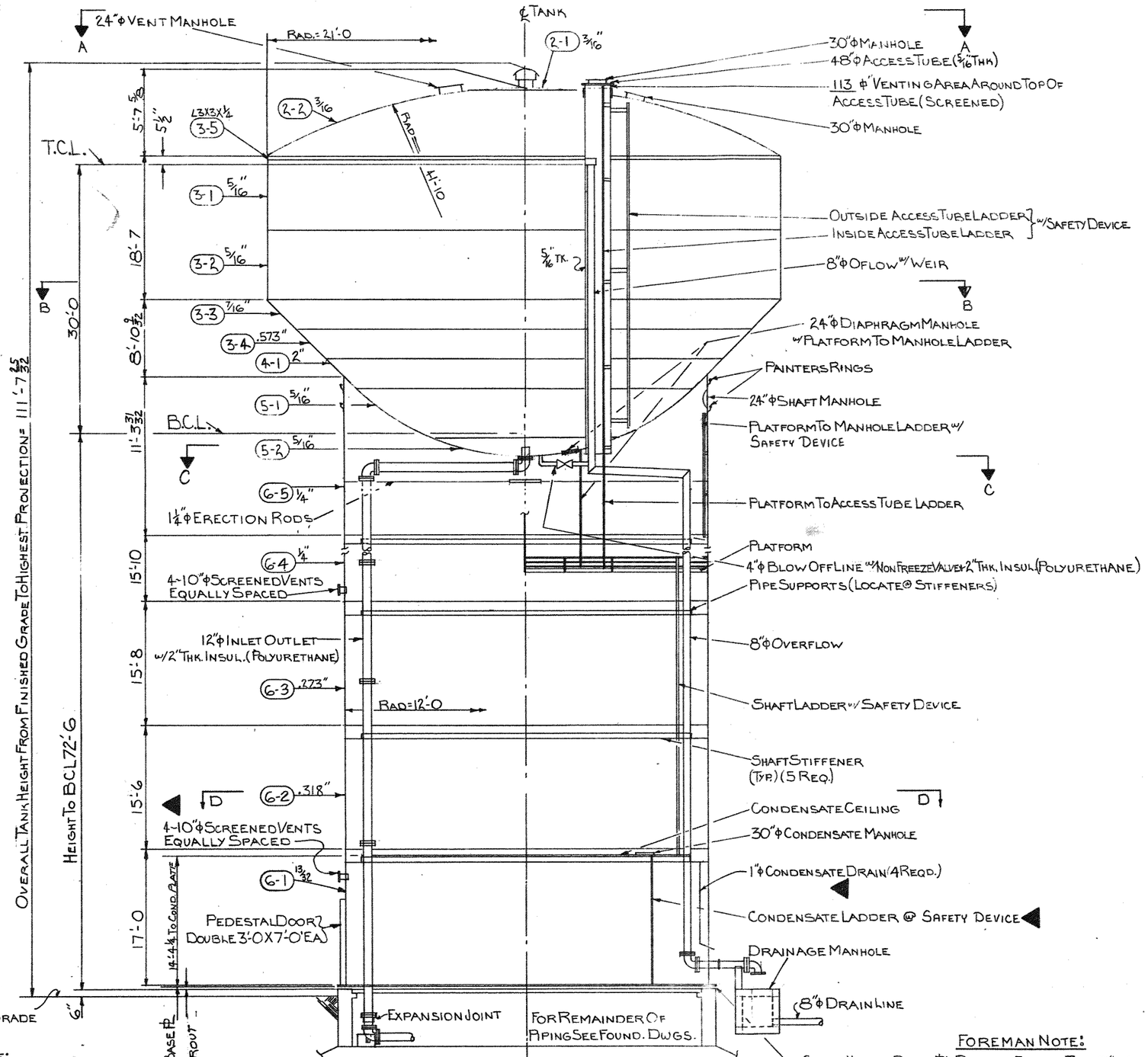

ELEVATION

FIELD NOTE:

PEEN ANCHOR BOLTS AFTER TIGHTENING NUTS, TO PREVENT EASY REMOVAL OF NUTS

FOREMAN NOTE:

GROUT UNDER BASE PL'S BEFORE FILLING TANK w/ WATER, FILL SPACE BETWEEN ANCHOR BOLT AND HOLE IN BASE PL w/ GROUT TO PREVENT WATER POCKETS, WET SURFACES THOROUGHLY & FILL w/ 1:1 PORTLAND CEMENT & SAND GROUT. OUTER EDGE TO BE SEALED w/ 1/2" TWO COMPONENT POLYSULFIDE (THIOKOL) SEALANT SUCH AS WEATHERBAN 101 AS MFG. BY 3-M CO. OR APPROVED EQ.

GENERAL NOTES

SPECIFICATIONS - AWWA D100-73 & CUSTOMER
SERVICE - MUNICIPAL
MATERIAL:
PLATE - A283-C & A36, STRUCTURAL-A36
INSPECTION:
MILL-NO SHOP-NO FIELD - CUSTOMER
PICKLE-NO
SANDBLAST-YES
PAINT-YES
LADDERS & SUPPORTS-OSHA-PARAGRAPH 1910
CORROSION ALLOWANCE: 1/16" ON WETTED SURFACES

Revisions	By	Chkd	Date	Remarks
				CUSTOMER APPROVAL
	KCE		4-18-78	

▶ INDICATES CHANGE FROM PREVIOUS ISSUE

Chicago Bridge & Iron Company CBI

GENERAL PLAN
250 MG FLUTED COLUMN ELEV. TANK
CITY OF WATERTOWN, NEW YORK

Purchaser's No. ____ By HH Chkd. JS Date 3-16-78
JOHN COSBY, Engineering Coordinator
Contract No. 71996
Dwg. 1 Rev. 1

THIS DRAWING IS THE PROPERTY OF CHICAGO BRIDGE & IRON COMPANY AND IS TO BE USED ONLY IN CONNECTION WITH PERFORMANCE OF WORK BY THE CHICAGO BRIDGE & IRON COMPANY. REPRODUCTION IN WHOLE OR IN PART FOR ANY OTHER PURPOSE IS EXPRESSLY FORBIDDEN.

DR 78A REV 10-72

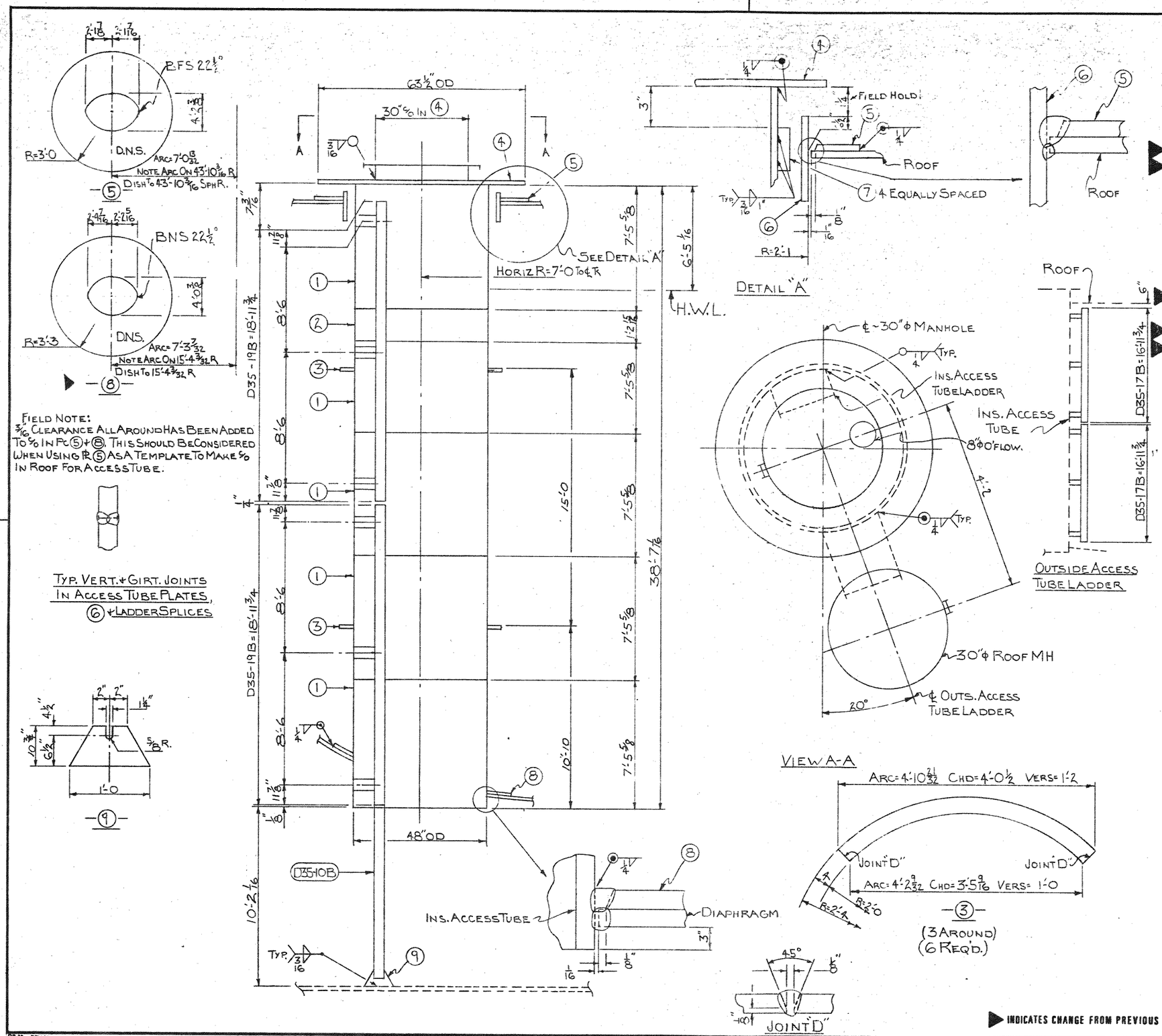

SHIP PC	MARK	ASSM PC	DESCRIPTION	LENGTH FT	LENGTH IN	SPEC
1	8-A		48" ⌀ ACCESS TUBE ASSY.	38	7 1/16	
	8-1	5	PL-8 9/16 X 5/16 (CF 90 X 12'-6)	12	5 7/8	A283C
	8-2	1	PL-14 15/16 X 5/16 (CF 15 25/32 X 12'-6 1/4)	12	5 7/8	do
	8-3	6	PL-5 X 1/2 (CF 31 9/16 X 4'-0 7/8 5/3)			do
	8-7	4	BAR 5/8 ⌀	1	6	A36
	D35-19B	2	WELDED LADDER ASSY (BILL COMP)	1	0	
	1D13-11	12	BAR 3 X 3/8	0	5 3/4	A36
		1	8" ⌀ OVERFLOW (SEE DWG #25)			
		1	WEIR BOX (SEE DWG # 26)			
1	8-4		PL-63 1/2" OD X 1/4 X 30" ID			A283C
			(CF 64 X 5'-4)			
1	8-5		PL-72" OD X 1/4 X 5 K ID			A283C
			(CF 72 X 6'-0)			
1	8-6		PL-17 X 1/4	13	0 9/32	do
1	8-8		PL-78" OD X 9/16 X 5 K ID			do
			(CF 78 3/8 X 6'-6 3/8)			
2	8-9		PL-5 K X 3/8 (CF 11 1/8 X 1'-9 5/2)			do
1	D35-10B		WELDED LADDER ASS'Y (BILL COMP)	10	0	
2	D35-17B		WELDED LADDER ASS'Y (BILL COMPLETE)	17	0	
	1D13-9	12	BAR 3 X 3/8	0	7 3/4	A36

GENERAL NOTES

1. 1/16 SHRINKAGE ALLOWANCE INCUDED IN PLATE LENGTH, SHRINKAGE ALLOWANCE EQUAL TO GAP INCLUDED IN PLATE ③ DIMENSIONS
2. VENTING AREA=113 SQ IN.
3. SEE DWG 20 + 1A FOR ORIENTATION.

▶ INDICATES CHANGE FROM PREVIOUS ISSUE

Revisions	By	Chkd	Date	Remarks
1	JS		4-28-78	CORRECTED PL. MT.
2		CDE	4-18-78	CUSTOMER APPROVAL

Chicago Bridge & Iron Company CBI

48" ⌀ ACCESS TUBE

Purchaser's No. | By JS Chkd. JS Date 3-16-78 | JOHN COSBY Engineering Coordinator

Contract No. 71996

Dwg. 8 Rev. 2

THIS DRAWING IS THE PROPERTY OF CHICAGO BRIDGE & IRON COMPANY AND IS TO BE USED ONLY IN CONNECTION WITH PERFORMANCE OF WORK BY THE CHICAGO BRIDGE & IRON COMPANY. REPRODUCTION IN WHOLE OR IN PART FOR ANY OTHER PURPOSE IS EXPRESSLY FORBIDDEN.

DR 75 REV 10-72

SHIP PC.	MARK	ASSM PC.	DESCRIPTION		LENGTH FT	LENGTH IN.	SPEC
18	9-1		L~4 X 3 X 1/4	FIN	18	2 3/8	A36
			FIN: R=41'-6 1/4	SHR	20	8	
2	9-2		L~6X6X1/2	FIN	10	4 3/32	do
			FIN. R=3'-3 1/2	SHR	13	0	
▶ 18	9-3		PL~5/8 X 3/8 (CFR. 8 1/2 X 0'-10 3/4)				A283C
4	9-4		J-BOLT 5/8" Φ (BENT) TO E 3" W/ HEX NUT		1	7	A36
18	9-5		PL~4 X 1 1/2 (CUT FROM SCRAP)		0	4	A283C
36			3/4" Φ HEX HD BOLTS & NUTS		0	1 3/4	A307B

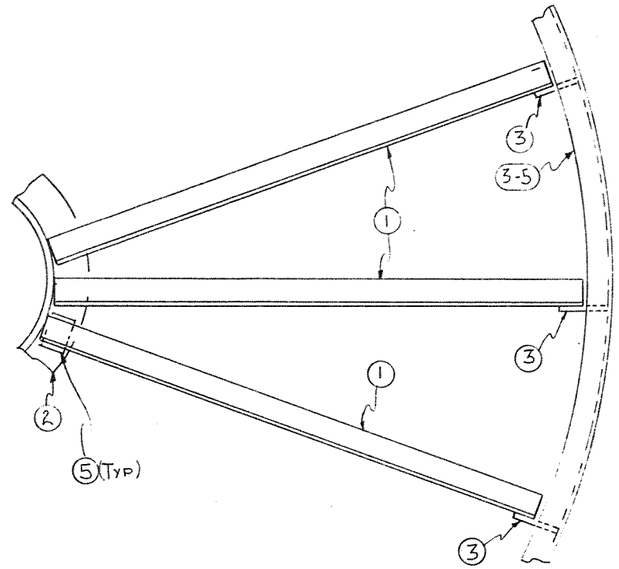

PLAN

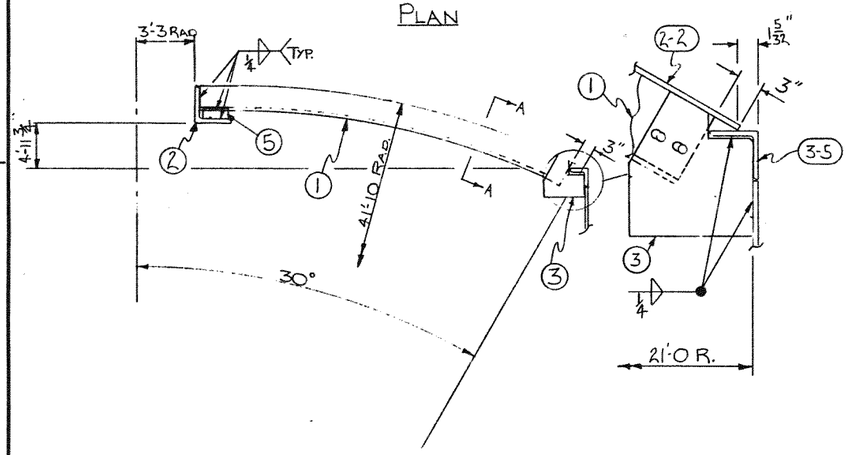

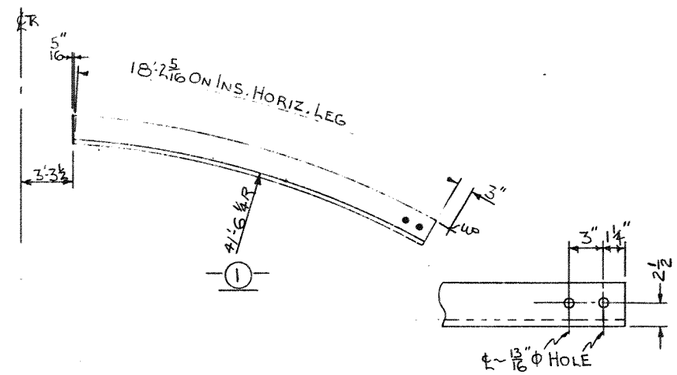

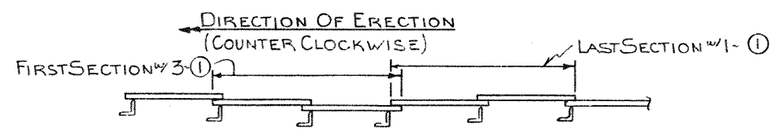

SECTION A-A

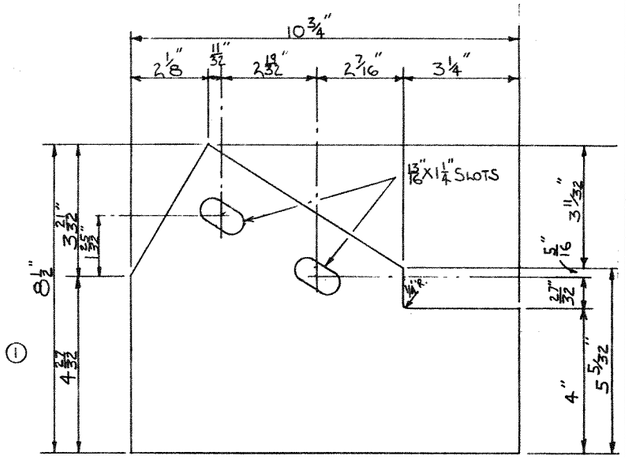

3
(18 REQ'D.)

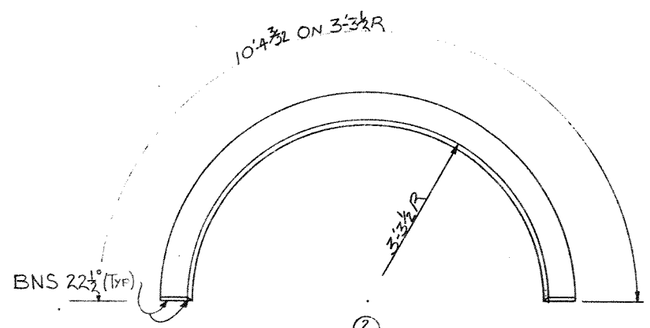

2
CENTER COMP. RING

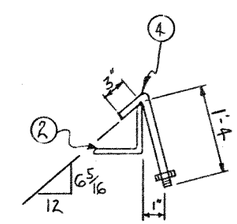

4

▶ INDICATES CHANGE FROM PREVIOUS ISSUE

Revisions	By	Chkd	Date
1	RCE		4-18-78

Remarks: CUSTOMER APPROVAL

Chicago Bridge & Iron Company CBI

ROOF FRAMING

Purchaser's No.
By EHH Chkd. JS Date 3-16-78
JOHN COSBY
Engineering Coordinator

Contract No. 71996
Dwg. 9 Rev. 1

THIS DRAWING IS THE PROPERTY OF CHICAGO BRIDGE & IRON COMPANY AND IS TO BE USED ONLY IN CONNECTION WITH PERFORMANCE OF WORK BY THE CHICAGO BRIDGE & IRON COMPANY. REPRODUCTION IN WHOLE OR IN PART FOR ANY OTHER PURPOSE IS EXPRESSLY FORBIDDEN.

DR 78 A REV 10-72

5-25

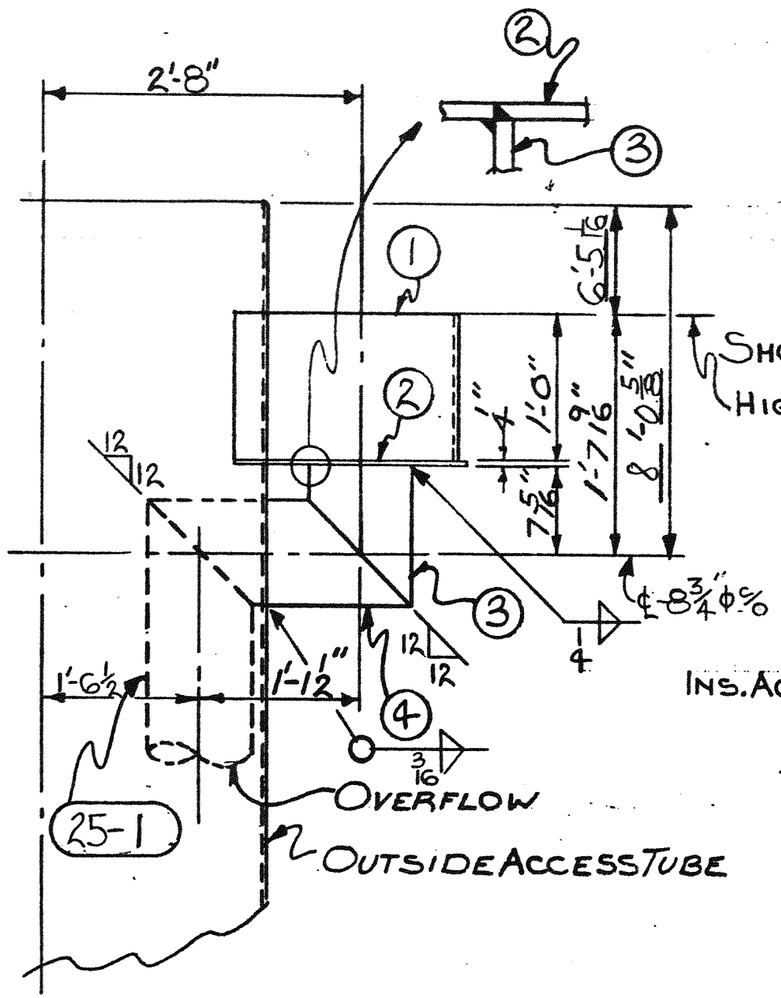

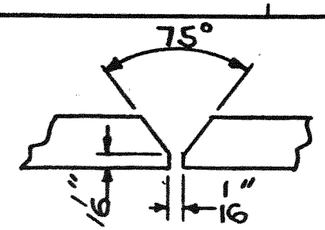

TYP. PIPE JOINT

SHOP ATTACH TO ACCESS TUBE

HIGH WATER LINE

SHIP PC	MARK	ASSM PC.	DESCRIPTION	LENGTH FT.	LENGTH IN.	SPEC.	WT.
	▲-1	1	PL~12X¼ (BENT)	4	6	A283-C	46
	▲-2	1	PL~SKX¼ (CF 18¾X1'-7")			do	24
	▲-3	1	PC~8"φ SCH 60 PIPE CTR	0	7 5/16	A53-B	
			POE MOE (CF PC. 11¾" LG.)				
	▲-4	1	PC~8"φ SCH 60 PIPE CTR	1	1½	A53-B	
			MBE (CF PC 1'-10¾)				

▲~MEANS BILLER INSERT DWG NO.

~~X~MEANS PC. IS NOT STD LENGTH~~

NOTE: WORK THIS DWG WITH DWG 25

~~#15-0 & #16-2~~

FOR OVERFLOWS 8"φ + UNDER

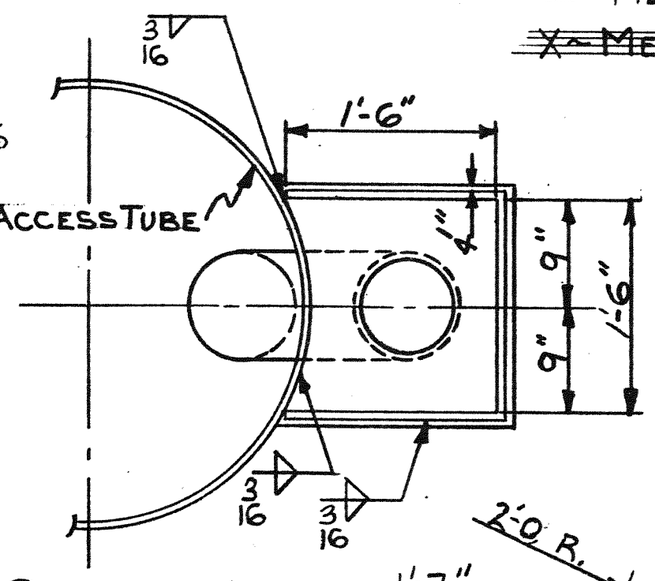

PLAN VIEW OF WEIR BOX

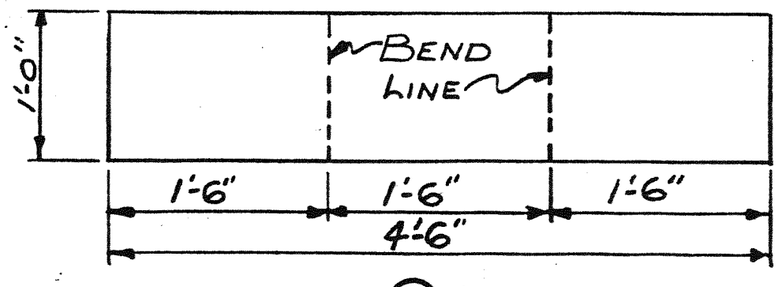

1

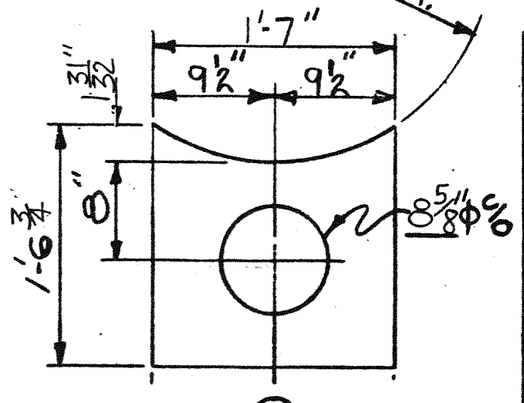

2

BY	CHKD	DATE	BY	CHKD	DATE	BY	CHKD	DATE	REVISIONS	REMARKS

CHICAGO BRIDGE & IRON COMPANY
BIRMINGHAM, ALA

WEIR BOX

PURCHASER'S NO.
DRAWN BY GH DATE 1-16-77
CHECKED BY JS DATE 3-16-78
JOHN COSBY
ENGINEERING COORDINATOR

CONTRACT NO. 71996

DWG NO. 26 REV 0

THIS DRAWING IS THE PROPERTY OF THE CHICAGO BRIDGE & IRON COMPANY AND IS TO BE USED ONLY IN CONNECTION WITH THE PERFORMANCE OF WORK BY THE CHICAGO BRIDGE & IRON COMPANY. REPRODUCTION IN WHOLE OR IN PART FOR ANY OTHER PURPOSE IS EXPRESSLY PROHIBITED.

MADE BY GH
CHK BY WEST

FORM NO. BH-H15Y-0

DR 72A BH

SHIP PC.	MARK	ASSM PC.	DESCRIPTION	LENGTH FT	LENGTH IN.	SPEC
▶ 1	32-1		L. 1½ x 1½ x 3/16 W/ HOLES FIN.	16	5 29/32	A36
			FIN. RAD.: 2'-7½ SHR.	20	0	
▶ 3	32-2		PL. 5K. x ¼			A283-C
			(C/F PL. 23¾ x 3'-11 17/32 1C/3)			
▶ 24			3/8"φ FIN. HEX. BOLTS & NUTS	0	1	A307-B
▶ 24			3/8"φ WASHERS			STL.
4	32-3		PC. # 4 MESH SCREEN WIRE			BRONZE*
			x SK W/ HOLES (.047"φ WIRE)			
			(BANDING NOT NECESSARY)			
			(C/F PC. 41 9/16 x 3'-10 11/16 1C/3)			

*COMERCIAL BRONZE (90/10)

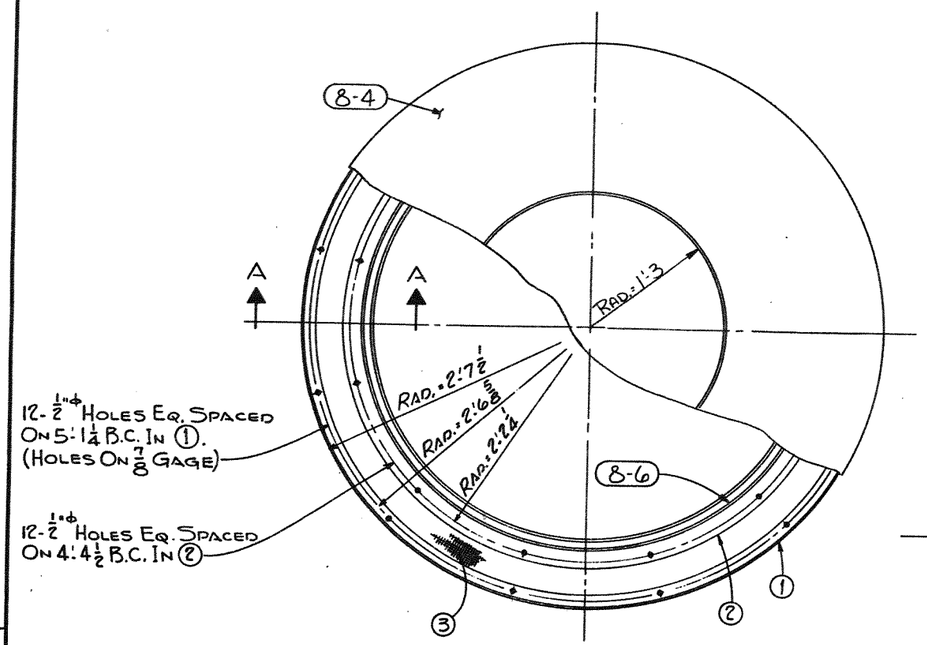

— PLAN —

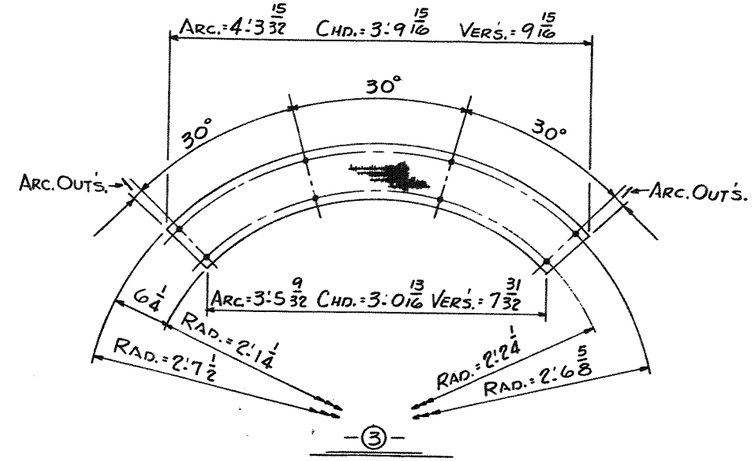

JOINT "B" AND ① TOG.

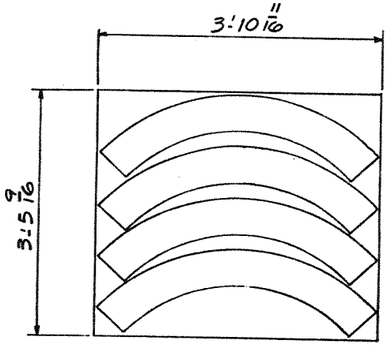

— CUTTING SK. ③ —

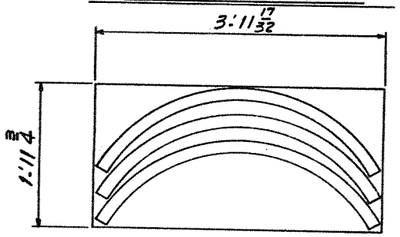

— CUTTING SK. ② —

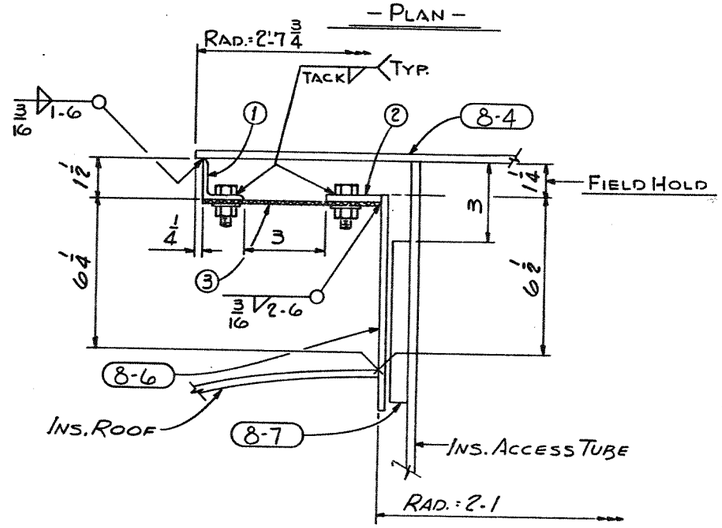

— SECTION — A A —

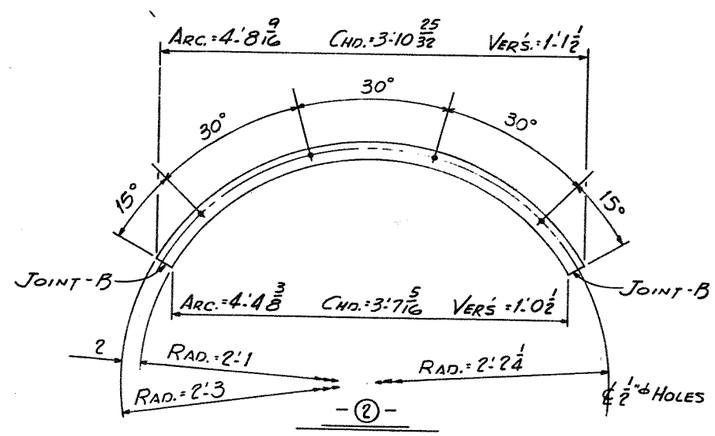

WORK THIS DWG. WITH DWG. # 8

By	Chkd	Date	Revisions	Remarks
By	Chkd	Date		
By	Chkd	Date		
CCE		4-18-78		CUSTOMER APPROVAL

Chicago Bridge & Iron Company CBI

SCREENED VENT FOR 48"φ ACCESS TUBE

Purchaser's No. ____ By CCE Chkd. JS Date 2-28-78

JOHN W. COSBY
Engineering Coordinator

Contract No. 71996

Dwg. 32 Rev. 1

THIS DRAWING IS THE PROPERTY OF CHICAGO BRIDGE & IRON COMPANY AND IS TO BE USED ONLY IN CONNECTION WITH PERFORMANCE OF WORK BY THE CHICAGO BRIDGE & IRON COMPANY. REPRODUCTION IN WHOLE OR IN PART FOR ANY OTHER PURPOSE IS EXPRESSLY FORBIDDEN.

▶ INDICATES CHANGE FROM PREVIOUS ISSUE

DR 78 REV 10-72

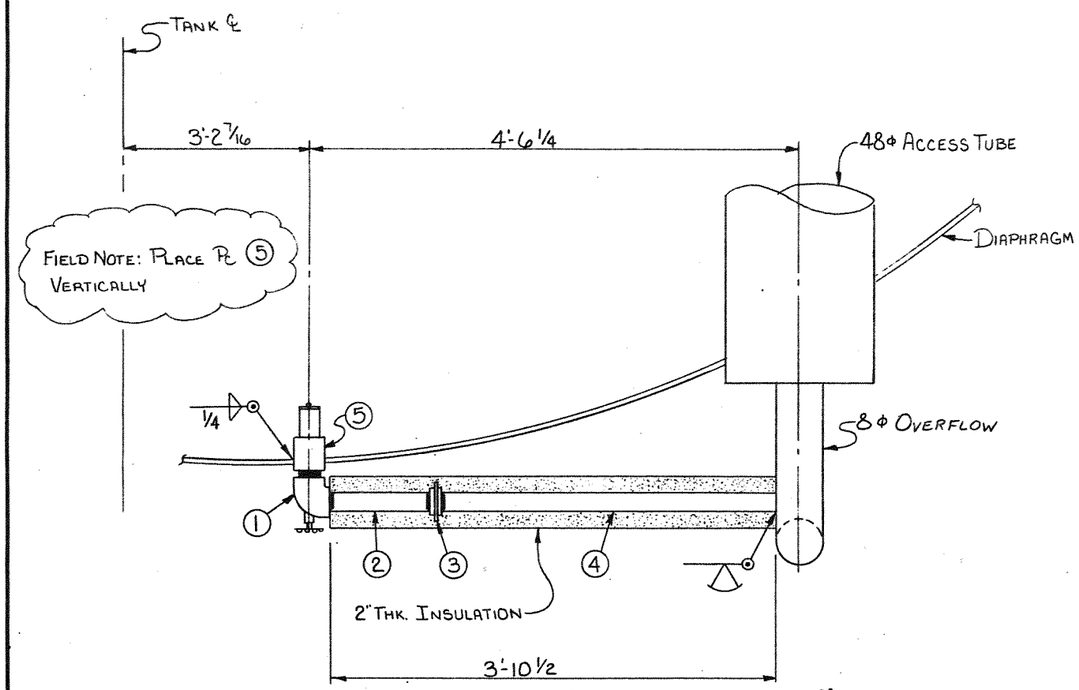

SECTION A-A

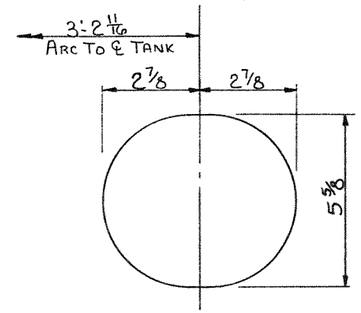

DIAPHRAGM CUTOUT
(FOR 4φ COUPLING)

FIELD NOTE: CUT PL ④ TO FIT, AND MAKE CUTOUT AND CONNECTION TO OVERFLOW PIPE

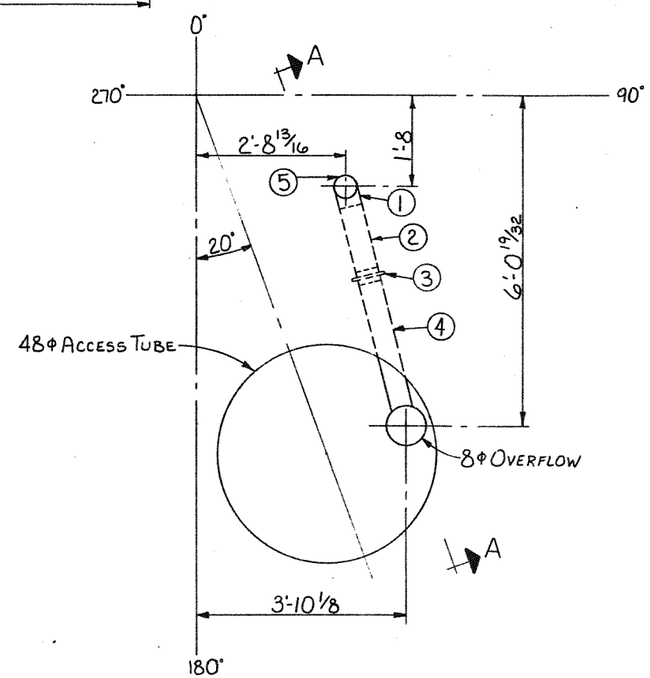

PLAN

SHIP PC	MARK	ASSM PC	DESCRIPTION	LENGTH FT	LENGTH IN.	SPEC
1	37-1		SHAND & JURS #96181-05 NON FREEZING			
			WATER DRAWOFF VALVE 4φ N.P.T.			
			(4φ) CAST STEEL BODY, STN. STL. TRIM			
1	37-2		PL-3φ STD WT. PIPE TBE	1	0	A53-B
1	37-3		3φ M.I. 150# FEMALE UNION			M.I.
1	37-4		PL-3φ STD WT PIPE TOE PBE	2	11	A53-B
1	37-5		4φ-3000# SCR'D. CPLG.			F.S.
2			PAIR OF 180° SECTIONS, 3'-0 LONG,			
			EXPANDED POLYURETHANE INSULATION			
			2" THK. FOR 3φ PIPE			
			PER CBI. STD. 9207-5-71 *			

*- INSULATION TO BE FURNISHED WITH A FACTORY APPLIED FIRE RETARDANT, LAMINATED KRAFT PAPER / ALUMINUM FOIL VAPOR BARRIER

▶ INDICATES CHANGE FROM PREVIOUS ISSUE

Chicago Bridge & Iron Company CBI

3φ WATER DRAWOFF
WITH
4φ ANTI FREEZE VALVE

Purchaser's No.
By CCE Chkd JS Date 2-28-78
JOHN COSBY
Engineering Coordinator

Contract No. 71996
Dwg. 37 Rev. 0

Remarks
Revisions
By Chkd Date By Chkd Date By Chkd Date

THIS DRAWING IS THE PROPERTY OF CHICAGO BRIDGE & IRON COMPANY AND IS TO BE USED ONLY IN CONNECTION WITH PERFORMANCE OF WORK BY THE CHICAGO BRIDGE & IRON COMPANY. REPRODUCTION IN WHOLE OR IN PART FOR ANY OTHER PURPOSE IS EXPRESSLY FORBIDDEN.

DR 79 REV 10-72

APPENDIX B

PAINT TEST AND ADHESION TEST RESULTS

TNEMEC COMPANY INCORPORATED
101 WEST 26TH AVENUE NORTH KANSAS CITY, MO 64116 TEL: 816-474-3400 FAX: 816-326-4332 WWW.TNEMEC.COM

Date: January 21, 2013
To: Carl Bye (045)
From: Chris Ard
Subject: Thompson Park Water Tank- Watertown, NY
Activity: Generic Identification

Tnemec Technical Service Preliminary Research Summary

PURPOSE / BACKGROUND INFORMATION

Technical Service received the sample chip reportedly obtained from the Subject location. Technical Service submitted the chip to the Tnemec Analytical Laboratory for the purpose of generic identification through FTIR spectral analysis.

ANALYSES

The gray front of the chip appears to be alkyd.

If other information becomes available, or if other forms of assistance are required, please let us know.

Regards,

Chris Ard, Technical Service Representative
NACE Certified Coatings Inspector #21453
Tnemec Company Inc.

Information, suggestions, and opinions in this report are based upon what is conveyed from the Painting Contractor/General Contractor/Architect/Engineer/Owner/Tnemec Representative; including but not limited to, the Analytical Analyses of the samples Tnemec receives from the Subject Project/Representatives. Therefore, the comments contained herein may or may not be pertinent to and reflective of all aspects of the Project.

From: Bye, Carl [cbye@tnemec.com]
Sent: Tuesday, January 15, 2013 4:49 PM
To: McGraw, Camie
Subject: RE: Thompson Water Tank in Watertown NY
Attachments: Thompson Park Water Tank Watertown, NY.doc; 135DS.pdf; 94-H2ODS.pdf; N140FDS.pdf; N69FDS.pdf; N69DS.pdf; FC22DS.pdf; 1075DS.pdf; 215DS.pdf

Hi Camie:

As I mentioned in my last e-mail I visited the Thompson Park Water Tank last Friday. I performed dry film thickness measurements that resulted in readings that were similar to your report. I also checked the adhesion and found it to be only fair. Normally this test is done with a tape pull over a scribe mark performed with a razor blade knife. Unfortunately the tape pull does not work well in the cold weather. While I was looking around the tank I saw evidence of an earlier adhesion test that was done with a tape pull. This showed delamination between the topcoat and the underlying coats which is problematic for any kind of an overcoat system. I also believe that the finish coat on this tank is pigmented with aluminum. Aluminum pigmented coatings are very difficult to overcoat because the aluminum weathers very well but the alkyd resin that it was in does not. This leaves a tin film of aluminum on the surface that is not well bonded to the underlying coatings.

I did collect samples of the coatings on the tank exterior and have sent them in to Tnemec for evaluation. This will take two weeks to complete. I will send these results to you when I receive them. However, based on the information I gathered on my visit and the information provided in your report I do not believe that this tank is a candidate for an overcoat system. The exterior coating should be removed to bare metal and a new system should be applied. Based on the photos of the interior wet areas of the tank I agree that the old coatings should be completely removed and a new system should be applied. The interior dry areas appear to be in good condition and can be addressed by a spot touch-up.

Attached is a suggested specification for all areas of the tank. Please give me a call to discuss so that we can review the specification in detail. Also attached are product data sheets for your review. Please give me a call if I can provide any further information.

Best Regards,

Carl

Carl R. Bye, Jr.
Performance Coatings Corp.
Independent Representative of
Tnemec Company, Inc.
8211 Penstock Way
Manlius, NY 13104
Phone: 315-682-2521 | Fax: 315-682-2170
Customer Service: 877-836-2764
Customer Service Fax: 816-483-3401

cbye@tnemec.com | www.tnemec.com

From: Bye, Carl [cbye@tnemec.com]
Sent: Friday, February 01, 2013 3:28 PM
To: McGraw, Camie
Cc: Fricano, Dan
Subject: FW: Thompson Water Tank in Watertown NY
Attachments: Thompson Water Tank 006.JPG; Watertown NY-Bye 01-21-13 CA.pdf

Hi Camie:

Here is the photo I took of my adhesion test. The full name of the test is:

ASTM D3359 Standard Methods for Measuring Adhesion by Tape Test: Test Method A-X-Cut Tape Test

In this test the coating, after the chalk is removed, is scribed in an X with a razorblade knife making sure to cut all the way down to the substrate. The loose chips are the brushed off and a special tape is applied to cover the area of the X. The stickiness of the tape is similar to duct tape. The tape is rubbed to maximize adhesion. The tape is then pulled off as you would a band aid. There is a scale that is used to determine the level of adhesion that ranges from 5A to 0A as follows:
5A - No Peeling or removal
4A – Trace peeling or removal along the incisions or at their intersections
3A – Jagged removal along the incisions up to 1/16 in. on either side
2A – Jagged removal along most of incisions up to 1/8 in. on either side
1A – Removal from most of the area of the X under the tape
0A – Removal beyond the area of the X

Due to the cold weather I was not able to perform the tape pull. The photo shows the X scribe and scratching with the tip of the razorblade. I consider this to be 2A – 3A. During my visit I also noticed that someone else had performed the same test with the tape pull. The results were between 0A and 1A. The delamination was between the intermediate coat and the topcoat. This combined with the delamination or erosion of the topcoat and the fact that the existing coatings are aluminum pigmented alkyd leads me to the determination that this tank is not a candidate for an overcoat system. You may remember that I mentioned in an earlier e-mail that old alkyd aluminum coatings are almost impossible to overcoat because the alkyd resin weathers away leaving the aluminum pigment poorly adhered on the top. This is why we saw the 0A - 1A result with the tape pull.

Also attached is a copy of the Tnemec laboratory report that verifies the resin type to be alkyd.

I expect to be available until 4PM today and on Monday Please give me a call if I can provide any further information.

Best Regards,

Carl

Carl R. Bye, Jr.
Performance Coatings Corp.
Independent Representative of
Tnemec Company, Inc.

8211 Penstock Way
Manlius, NY 13104
Phone: 315-682-2521 | Fax: 315-682-2170
Customer Service: 877-836-2764
Customer Service Fax: 816-483-3401

cbye@tnemec.com | www.tnemec.com

APPENDIX C

CHICAGO BRIDGE AND IRON (CB&I)

STEEL TANK BROCHURE

Hydropillar®

Elevated Water Storage

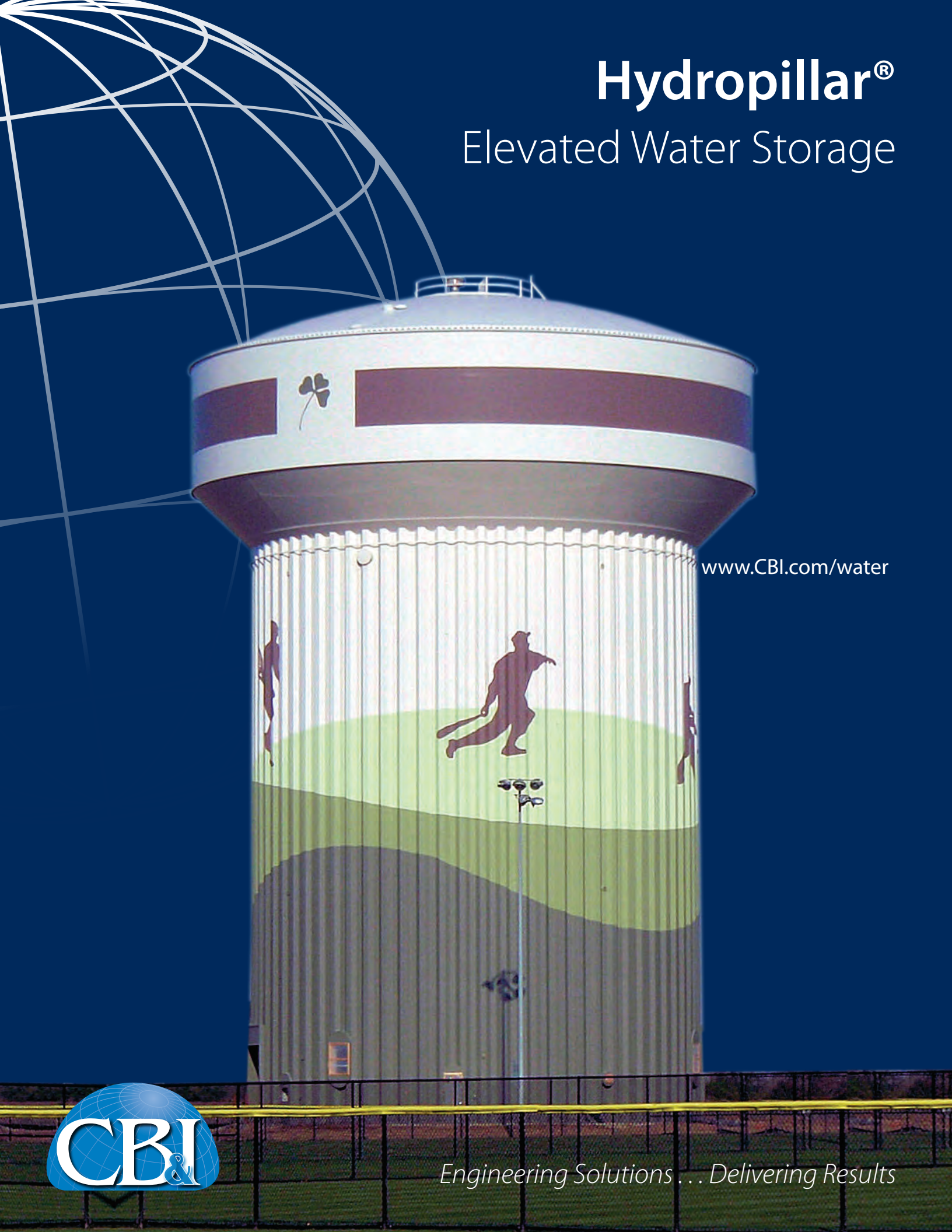

www.CBI.com/water

CB&I

Engineering Solutions . . . Delivering Results

Why a CB&I Hydropillar® Elevated Tank?

Multi-purpose treatment laboratory and office facility; STI/SPFA Tank of the Year

Interior lunch room inside a pillar

Attractive graphics enhance community identity

Largest elevated tank in the United States – 4,100,000 gallons

Combining the support strength and multi-purpose inside space provided by a large diameter support pillar, the Hydropillar elevated tank is one of the most popular and attractive styles of elevated water storage tanks.

CB&I invented the original Hydropillar tank design in 1962 and has been improving the concept ever since. We have built more fluted column elevated tanks than any other company, including the tallest and largest capacity tanks in service. CB&I's unique dome roof design eliminates ponding, which improves paint durability and reduces streaking on the side of the tank. The self-supporting dome roof also minimizes interior structural supports in the vapor area of the tank where condensation occurs. Since this is the most corrosion-prone area in the tank, future maintenance requirements are reduced.

The Hydropillar tank design offers a high degree of customization and flexibility. The space inside the pillar can be used in a wide variety of innovative ways, or it can be reserved for future expansion. Many sizes, options and features are available for Hydropillar tanks, which provide storage capacities ranging from 200,000 gallons to more than 4,000,000 gallons. In smaller capacities an optional wineglass style offers additional attractive and creative applications.

Hydropillar tanks are all-steel, all-welded structures that have proven reliability, serving municipalities and industries for decades. The vertical steel flutes accentuate the clean, modern design. The large diameter steel pillar also offers excellent stiffness to earthquake loads, superior suitability for low load-bearing soil, and unobstructed access for exterior inspection and maintenance. Properly maintained and operated, steel tanks offer an extremely long life, with some structures exceeding 100 years of service.

On the cover: 2,000,000 gallon tank, Dublin, OH; STI/SPFA Tank of the Year

Since the construction of our first elevated tank in 1894, CB&I has become a global leader in the design and construction of elevated water storage tanks. We pioneered the transition to welded steel tanks in the 1930s and invented the original Hydropillar tank in 1962. We also have been instrumental in the development of the AWWA standards, beginning with the first D100 standard in 1941, continuing today through active organization and committee participation.

Selecting a CB&I Hydropillar Elevated Tank

CB&I provides sample specifications and detail drawings for engineers and owners who are planning Hydropillar tank projects. Contact CB&I's regional sales force to receive guidance on specifying your tank or visit our website at **www.CBI.com/water** to view our standard specifications and drawings.

Multi-Purpose Interior Space

- Dual use as offices, meeting rooms, pump station, fire station, equipment and machinery storage, etc.
- Steel fluted column (i.e., pillar)
  - Easily integrates with interior structural steel for multiple floors
  - Allows exterior windows
- Offset riser pipe maximizes available interior space

Economics

- Especially economical in larger capacities
- All-steel construction permits cost-effective, year-round construction
- Large diameter fluted column is particularly advantageous in high earthquake zones or on soil with low load bearing capacity
- Effective cost is reduced when the value of the interior space is considered
- Turnkey supply of foundation and painting offers cost and schedule savings
- Height can be modified if pressure requirements change after installation

Dual storage – 620,000 gallons upper tank and 1,130,000 gallons lower tank; STI/SPFA Tank of the Year

Multi-purpose fire station

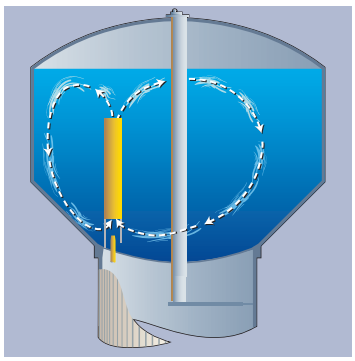

FreshMix™ circulation system

Aesthetics

- Clean, modern appearance
- Vertical architectural lines blend well with surrounding structures and landscapes
- Capitalizes on high visibility locations
  - Optional lettering and logos enhance community identity and pride

Safety and Security

- Solid, flush threshold steel door with deadbolt lock restricts unauthorized entry
- Optional overhead door
  - Quick entry and exit for trucks and large equipment
  - Easy access for larger storage items
- Enclosed interior access ladders
  - Minimize vandalism and unsightly graffiti
  - Minimize unauthorized tank access
  - Facilitate climbing during inclement weather

Maintenance

- Interior dry surfaces are weather-protected and seldom need repainting
- Maintenance access to all exterior surfaces is unhindered

Optimum Head Range

- Standard design provides efficient head range
  - Minimizes pumping costs
  - Minimizes variation in water pressure
- Optional head ranges available

Dual Water Storage Compartment Capability

- Can serve two different pressure systems
- Can provide dual owners with separate water storage

Dome Roofs

- Improved appearance
- No ponding, minimize ice and snow accumulation
- Prevents corrosion and streaking on side of tank

Standard Features & Options

Standard Features

- One 36 in. wide by 80 in. high steel personnel door with flush threshold
- Crushed stone floor inside base
- Offset steel riser pipe
- Steel overflow pipe to grade with splash block
- Fluted column vents
- Offset ladders inside fluted column (i.e., pillar), with rest platforms at 24 ft maximum intervals
- Safety devices on ladders as required by state and federal regulations
- Walkway with handrails from top of fluted column to access tube
- Erection rods under tank bottom for construction and maintenance scaffolding
- One 48 in. diameter access tube
- Ladder in access tube
- Painter's rings at top of fluted column
- One 24 in. diameter painter's ring hatch
- One 30 in. tank bottom manhole with access ladder to walkway
- Two 30 in. diameter roof hatches
- One 24 in. diameter painter's ventilation roof hatch
- Minimum 1/4" thick steel roof plates
- Seal welding underside of roof
- Fail-safe roof vent
- Painters lugs or coupling near tank center inside bottom and roof
- Interior lighting in fluted column and access tube

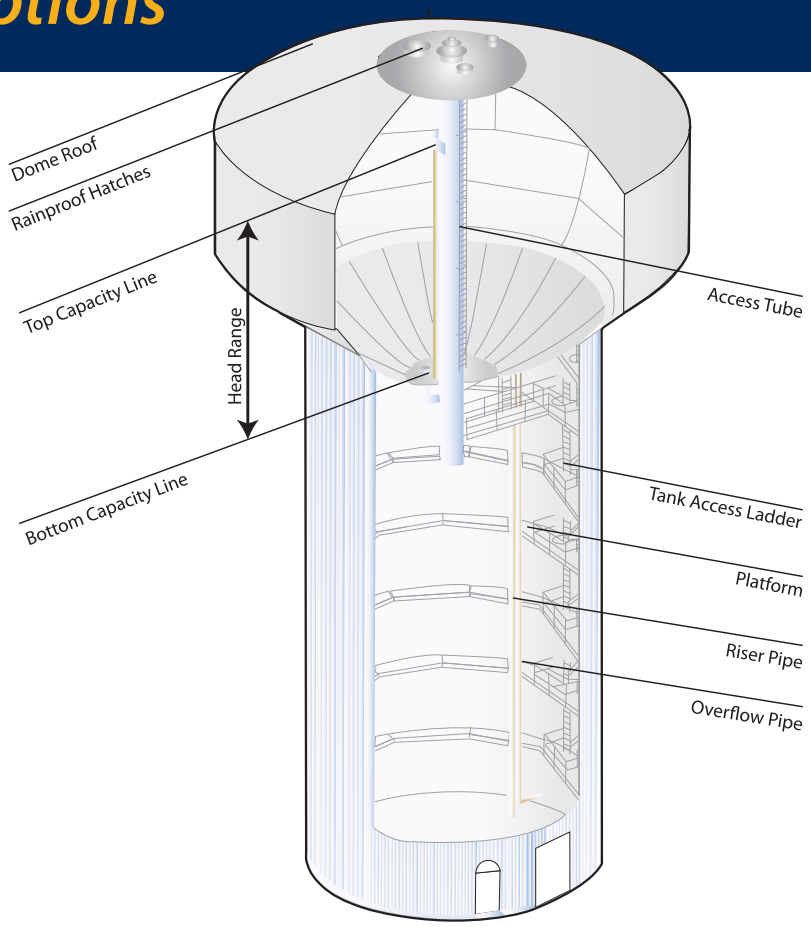

Standard Capacities and Dimensions

Capacity U.S. Gallons	Tank Diameter ft–in.	Head Range* ft–in.	Fluted Column Diameter ft–in.
200,000	42 - 0	25 - 0	24 - 0
250,000	42 - 0	30 - 0	24 - 0
300,000	47 - 0	30 - 0	24 - 0
400,000	50 - 0	30 - 0	24 - 0
500,000	57 - 0	32 - 0	30 - 0
500,000	49 - 6	38 - 0	30 - 0
750,000	64 - 0	40 - 0	42 - 0
750,000	62 - 0	40 - 0	36 - 0
1,000,000	74 - 0	40 - 0	52 - 0
1,000,000	74 - 0	40 - 0	44 - 0
1,250,000	80 - 0	40 - 0	52 - 0
1,500,000	86 - 0	40 - 0	60 - 0
1,500,000	90 - 0	40 - 0	52 - 0
2,000,000	100 - 0	40 - 0	78 - 0
2,000,000	100 - 0	40 - 0	66 - 0
2,500,000	108 - 0	44 - 0	78 - 0
3,000,000	120 - 0	42 - 0	90 - 0
3,500,000	125 - 0	45 - 0	90 - 0
4,000,000	135 - 0	45 - 0	90 - 0

*CB&I has other head ranges available for each capacity tank. Please contact us if you need assistance.

Options

- Lettering, logos and decorative graphics
- Dual compartment water storage
- FreshMix™ circulation system
- Structural framing, multiple floors and ceilings inside the fluted column
- Additional openings in fluted column (e.g., windows)
- Double personnel door
- Overhead doors
- Valve vault inside base
- Concrete floor inside base
- Control room in fluted column
- Dual risers
- Stainless steel riser
- Stainless steel overflow
- Riser insulation and heat tracing
- Alternative ladder arrangements inside fluted column
- Fabric or steel condensate ceiling with drain
- Closure plates between flutes and stiffener plates
- Upsized 60 in. diameter or 72 in. diameter access tube
- Tank drain
- Internal tank ladder on access tube
- Roof handrail
- External security or decorative lighting
- FAA lighting
- Instrumentation
- Telemetry
- Cathodic protection
- Lightning protection
- Antennae penetrations and supports

Above: Lexington, SC – 1,000,000 gallons

Top left: Bowie, MD – (3) 1,500,000 gallons each

Top middle: Clermont Co., OH - 2,000,000 gallons

2nd left: Atmore, AL– 1,000,000 gallons

3rd left: Ripon, CA – 2,500,000 gallons*

Bottom left: Niceville, FL – 500,000 gallons

Bottom middle: Shenandoah, TX – 750,000 gallons

* STI/SPFA Tank of the Year Award

Engineering Solutions…
Delivering Results

CB&I has provided superior value and reliability to the water storage industry for more than a century. We built our first standpipe in 1893 and our first elevated water storage tank in 1894, pioneered the transition to welded steel tanks in the 1930s, and invented the original Watersphere®, Waterspheroid® and Hydropillar® storage tanks. We've built more than 25,000 water storage tanks around the world.

CB&I is one of the few companies with the capability to self perform all facets of a water storage project … from concept to completion. We can handle the engineering, foundation construction, fabrication, tank construction, and painting. This comprehensive approach helps our customers achieve the most cost-effective and functional solution. With our in-house personnel, we also provide complete design-build services to guide all aspects of a project, from preliminary planning to post-construction services.

At CB&I, we focus on providing water storage solutions safely, to the highest quality standards, on time, and at a competitive price. Contact one of our regional sales offices or visit our website at **www.CBI.com/water**.

Corporate Office:
The Hague, Netherlands

Worldwide Administrative Office:
The Woodlands, Texas USA

Only employees, agents, or representatives authorized under and pursuant to written agreement with CB&I are authorized to distribute this brochure to an actual or potential client of CB&I. ©Copyright 2011 by Chicago Bridge & Iron Company. All rights reserved. Printed in USA. B2150-2

APPENDIX D

STATEWIDE AQUASTORE INC.

COST ESTIMATE AND BROCHURES

AQUASTORE®
Tanks & Domes

Glass Tanks with a Heart of Steel™

Composite Elevated Tanks

When it comes to elevated water storage tanks, Aquastore® composite elevated tanks stand tall above the rest.

www.aquastore.com

MADE IN AMERICA WITH AMERICAN STEEL

Aquastore® raises the standard in elevated water tank quality.

With hundreds of Aquastore composite elevated tanks (CET) already installed, glass-fused-to-steel technology offers the lowest ownership cost of any elevated water storage tank. Traditionally, elevated tanks are a field-welded, painted steel tank on top of a steel structure or concrete pedestal. Steel tanks and structures need to be taken out of service periodically to sand blast and repaint the interior and exterior – a costly procedure.

Fast, efficient, worry-free containment with Aquastore.

Aquastore CETs include typical features, such as customizable concrete pedestals for internal use, and are completed in less time than other elevated tanks. Once an Aquastore CET is constructed, it is ready for use without the need to sandblast or paint. Field-welded CETs have high construction costs, high ongoing maintenance costs and lengthy construction times. For fast construction and reliable long-term storage, make your next CET project an Aquastore.

Aquastore tanks...

- **Can be constructed in less time than traditional elevated tanks**
- **Are ready for use after construction**
- **Never need painting**

Glass-fused-to-steel: a proven technology in composite elevated tanks.

Aquastore tanks incorporate the very latest glass-fused-to-steel technology to both the interior and exterior of each of its tank panels. All Aquastore CETs follow the same strength and quality guidelines used by more than 10,000 glass-fused-to-steel Aquastore tanks installed in North America.

- **Provides storage capacity for almost any system – up to 1.5 million gallons with overflow elevations up to 200-feet high**
- **Lowest cost of ownership**
- **Corrosion-resistant**
- **Easy to inspect**

World-class service and attention from independent, Authorized Aquastore Dealers.

When it comes to water storage, Authorized Aquastore Dealers are among the best consultants in the industry. They are determined to implement and engineer the application that best fits your needs. Aquastore dealers also provide turn-key project responsibility from conception to commissioning right to the customer – a service that is unique to Aquastore.

Visit www.aquastore.com to find a dealer nearest you.

The Aquastore "CET Package" – A turn-key project plan for your installation.

The "CET Package" from Aquastore is a plan drawn up between you and your Authorized Aquastore Dealer that covers everything needed to complete a composite elevated tank application. The pedestal, the installation of inlet and outlet piping, manway entrances and the top cap/walkway are all customized to fit the preparations laid out in the "CET Package." After a package is agreed upon, the dealer will walk you through each step of the construction process to make sure each component of the project is built to the original plan.

Tank variety with Aquastore you won't find anywhere else.

With tank capacities ranging from 50,000 to over 1,000,000 gallons, your Authorized Aquastore Dealer will fit you with the proper system to meet the potable water needs of your community. Visit www.Aquastore.com to request a quote and get in contact with a dealer in your area.

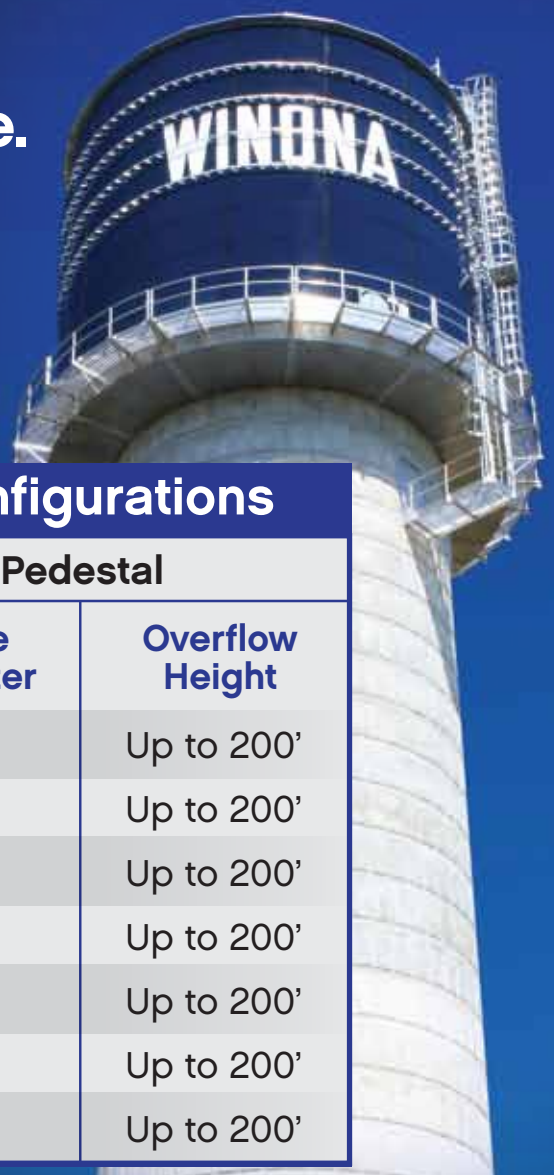

Typical Aquastore CET Configurations

	Aquastore Tank	Pedestal	
Tank Capacity	Typical Size Diameter x Height	Inside Diameter	Overflow Height
150,000	28' x 33'	24'	Up to 200'
200,000	31' x 33'	30'	Up to 200'
300,000	39' x 33'	36'	Up to 200'
500,000	50' x 33'	40'	Up to 200'
750,000	59' x 38'	45'	Up to 200'
1,000,000	62' x 47'	50'	Up to 200'
1,500,000	67' x 56'	55'	Up to 200'

Visit www.aquastore.com to find a dealer nearest you.

ENGINEERED STORAGE PRODUCTS COMPANY

Engineered Storage Products Company
345 Harvestore Drive • DeKalb, IL 60115
815-756-1551 • www.aquastore.com

AQUASTORE® Tanks & Domes

Glass Tanks with a Heart of Steel™

© 2009 Aquastore is a registered trademark of Engineered Storage Products Company.

050109

6010 Drott Drive
East Syracuse, NY 13057-2943
Toll Free: 800.H2O.TANK
Phone: 315.433.AQUA (2782)
Fax: 315.433.5083
Website: www.besttank.com
Email: aquastore@besttank.com

December 21, 2012

Conestoga - Rovers & Associates
285 Delaware Avenue
Suite 500
Buffalo, NY 14202
(716) 856-2142 Phone

Attention: Camie McGraw (camiemcgraw@craworld.com)

Re: **AQUASTORE®** Composite Elevated (CET) Potable Water Storage Tank
Watertown, NY

Dear Camie:

Thank you for your interest in **AQUASTORE®** glass-fused-to-steel storage tanks. The following budget price is for the composite elevated, concrete floor, aluminum geodesic dome roof, potable water storage tank that you are interested in. The tank is designed to AWWA D-103 allowables and manufactured to AWWA standards.

Design parameters for budget purposes are: Seismic based on category IV. Estimated soil bearing capacity of 6,000 PSF – site class C, AWWA wind design and 60 psf ground snow load.

- **Please note that Foundation/Pedestal prices are ESTIMATES. Accurate soil bearing capacity, seismic site class, frost depth and other pertinent information is required to determine the exact design and costs of the foundation/pedestal.**

Model	Nominal Capacity in Gallons	Capacity w/Indicated Freeboard	Freeboard Inches Provided	Diameter in Feet	Sidewall Height in Feet	Overflow From Grade in Feet	Pedestal Diameter in Feet	Pedestal Height in Feet	Total Price
36 35 SS	271,500	262,400	14”	36.37’	34.95’	110.00’	24.00’	76.21’	$835,000

NOT INCLUDED: Any and all site work *(including but not limited to) access roads, site preparation, excavation, backfill, backfill materials, rock or organic material removal, compaction/compaction testing), all site pipe (material and installation). Also* ***NOT*** *included: Lightning protection, mixing systems, fencing, any electrical, name sheets and water/disposal for tank testing.* ***Any permits, state or local sales and use taxes and bonds are not included.***

The following items are included in the budget numbers:

- White (Exterior only) Glass-Fused-To-Steel Shell Assembly with “**Edge Coating™**” and **“**Glass 97” (Off-White) Interior
- Aluminum Geodesic Domed Roof Assembly with Gravity Vent and Safety Cable – Rated as noted above
- Foundation and Pedestal Design (based on soils and other pertinent information provided by others)
- Glass-Fused-To-Steel Starter Ring Assembly with Epoxy Coated Concrete Floor
- OSHA Compliant Ladder, Cage and Platform Assembly (ground level to top of tank)
- One Top Manway and One Bottom Manway
- Aluminum Overflow Piping (to bottom of pedestal) and Weir Box

continued on Page 2

December 21, 2012

Re: **AQUASTORE®** Composite Elevated (CET) Potable Water Storage Tank
Watertown, NY

- Exterior Protective Caps
- Sacrificial Anode Cathodic Protection System
- Reinforced Concrete Pedestal (with Rustications), Platform and Aluminum Railing
- Tank Installation, Testing and Freight
- Overhead Door in Base of Pedestal Column (10-ft wide x 10-ft high)
- Upper and Lower Standard Service Doors in Pedestal Column
- Single combination Inlet/Outlet DI Pipe, to 12" Diameter inside Pedestal to 5-ft Outside of Pedestal Foundation
- Insulation and Heat Trace of Inlet/Outlet Pipe Inside Pedestal
- Testing of Concrete and Piping (pipe test from top of pedestal to 5-ft outside pedestal foundation)

Note that with any storage tank, a daily turnover rate of 25% of the total tank volume will aid in the prevention of stagnation, chlorine retention or cold weather issues. If turnover is less, additional considerations may be recommended.

The price in this quotation is valid for 30 days and is based on Open Shop, Prevailing wage labor. If you have any questions, please do not hesitate to call. We would be glad to provide you with job specific specifications and drawings for Aquastore® tanks if desired. We are looking forward to working with you as this project develops. Thank you again for the opportunity to offer budget prices for your consideration.

Kindest Regards,

Melisa Keskin
Assistant Project Manager

cc: AMK; CLL; BCG; file 4054

Glass Fused-To-Steel Water Storage Tanks

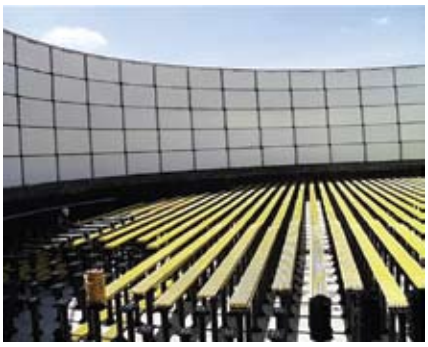

STATEWIDE
AQUASTORE, Inc.

Topics

Introduction

Manufacture & Erection

Advantages

Disadvantages

Other Considerations

Manufacturing Improvements

Maintenance

Conclusion

Introduction

The configuration and selection of a water storage tank is often something that needs to be done in the early stages of a project design. In order to apply for and secure funding that may be available, timing of construction and overall project costs will all play a factor in the determination. Because many municipalities have a single source of water storage, the tank design plays a critical role in meeting the current and future needs of the community and project.

Review of community demands for current and anticipated water supply, site conditions, pressure requirements, long term maintenance, ease of access and overall costs are only some of the critical details essential to the ultimate selection of the tank configuration.

There are three types of liquid storage tanks available that are considered for municipal water storage applications: Glass coated bolted steel, welded painted steel and concrete.

Tanks utilized in potable water systems are designed to AWWA (American Water Works Assoc.) standards. Tanks used in wastewater or landfill applications are designed to AISC (American Institute of Steel Construction) and fire storage tanks are typically designed to NFPA (National Fire Protection Association) standards.

The first edition of AWWA D100 for painted steel tanks was issued in 1941. The standard for bolted glass fused-to-steel AWWA D103 was issued 39 years later in 1980. Six years later AWWA issued the first edition for wire wound pre-stressed concrete tanks in 1986.

Manufacture & Erection

Application & History - Glass fused-to-steel tanks are used for a variety of liquid storage applications. Potable Water, Wastewater, Equalization, Sludge, Landfill Leachate, Brine, Trickling Filters, Sequential Batch Reactors (SBR), Frac Storage, Aerobic and Anerobic Digesters are just some of the many applications that can benefit from the use of this type of tank.

The process of fusing glass to steel has been in existence for well over 100 years and began in the beer brewing industry. In the late 1800's, the technology was used in the United States and in the 1940's the technology was applied to agriculture by A.O. Smith Harvestore Products, Inc. storing silage and manure. These types of tanks are known as Harvestores and Slurrystores respectively. There are tens of thousands of these structures dotting the countryside on local farms.

In the early 1970's, glass coated bolted steel tanks were recognized for their superior coating and quality and were introduced into the liquid storage market, where they dominate today.

Design & Configurations – Glass coated bolted steel tanks are used in a variety of configurations from

Manufacture & Erection (cont'd)

standpipes, reservoirs and most recently Composite Elevated (CET) designs. Standpipes are tanks where pressure is required to properly feed the system and the water is elevated in a tall column to achieve this. The tank height is larger than the tank diameter. The elevation of the water is accomplished by storing the required "water on top of water". Standpipe height usually does not exceed 140'.

Reservoirs are the most common configuration used in water storage. With this design, the tank diameter is larger than the tank is tall and these tanks can be used with a pumping system or by gravity. The diameter of these tanks can reach 250' with capacities up to 6 million gallons.

The CET design is used in applications similar to a standpipe, in that height is used to achieve the head pressure needed to properly operate the system. The CET column is constructed with jump form technology resulting in a hollow concrete pedestal on which the tank is then constructed. There is an enormous amount of structural rebar and steel embedded in the concrete with walls that can exceed 10" thick and a top cap of about 4' thick concrete.

The concrete pedestal interior offers plenty of space for pump stations, municipal maintenance equipment, office space and other uses. There are theoretically no height limitations for CET's and capacities are up to 1.5 million gallons.

The roof of glass bolted tanks varies depending upon the diameter, snow loads and other factors. They can be the same glass fused-to-steel material (Knuckle Design) as the tank or a free-span aluminum geodesic dome, consisting of panels mounted on a rigid structural frame (Geodesic Design).

The tank floors are usually constructed with a monolithic concrete pour or they can be glass fused-to-steel panels depending upon site and design conditions.

Advanced Technology – The unique manufacturing process of this equipment and advanced technology is what sets these tanks apart from typical painted steel or concrete structures. The tanks are constructed exclusively of United States materials and all of the manufacturing is completed in a U.S. plant (CST) in DeKalb, Illinois. CST Industries has the largest glass fused-to-steel tank manufacturing facility in the world. All critical manufacturing is completed in an ISO-9001 certified controlled environment. The high level of quality control ensures an exceptionally manufactured product. The uncontrolled variables, that exist for field manufactured products such as painted steel, and concrete tanks, are eliminated with the factory manufacturing. Adverse weather, extreme temperatures, worker experience & environmental conditions that are proven to have a significant effect to onsite manufactured products, have minimal effect on the glassing process. In addition, the tanks are easily erected year around as the manufacturing itself is completed in the factory and only the assembly of the components is required in the field.

Coating – Essentially all storage tanks have a coating. The coatings' available today consist of either concrete, paint or glass. The impermeability and unique features of the glass offer numerous advantages over the other choices.

The glass coating process begins with a glass frit that is mixed with other minerals and water to create a liquid slurry. This glass slurry is then robotically sprayed

at precise amounts and thicknesses onto previously cut and rolled, punched, grit blasted and cleaned steel panels. The panels are then run through a furnace at 1500° F. This high heat melts the silica glass slip into the surface of the grit blasted steel. This completes the mechanical bond as well as the chemical bond between the steel and the silica glass. Different coatings that are

Manufacture & Erection (cont'd)

available for other tanks rely on a mechanical bond of the coating to the underlying material. In addition to the mechanical bond, the glass fusing process also provides a chemical bond of the materials. This chemical bond strength is many times the holding strength of the conventional mechanical bond and prevents any undercutting of the coating which can allow spreading of corrosion on the primary steel material. This benefit can best be explained by imagining a scratch on an automobile. Because that coating has only a mechanical bond, if the steel is exposed, corrosion will begin to occur. Left untreated this corrosion will expand and creep beneath the surrounding painted surface and compromise the remaining coating. This is often witnessed with raised bubbles, spreading rust and weakened substrate. The chemical bond of the glass fused-to-steel coating prevents this spreading of corrosion in the event the coating was compromised.

Tank Erection – Erection of the glass fused-to-steel tank in the field encompasses a unique jacking system. Once the starter sheet (bottom ring) is either embedded into the concrete foundation or constructed utilizing a glass coated bolted steel floor design, the top ring of the tank is constructed on the jacks. The roof of the tank is then erected and the ring and roof are jacked up. Each additional ring is then assembled below the top ring by bolting the sheets together and applying a specially manufactured urethane sealant between the seams. All construction is completed at ground level ensuring a safe, fast and efficient

building environment. Tanks are normally completed within a week or two which saves significant costs to the owner if prevailing wages for onsite labor are being used. Additionally, the manufacturer requires that all building crews be factory trained and certified in the erection process, ensuring the same quality control in the field. Only fully trained erectors are used for the construction of these tanks.

Advantages

Maintenance Costs - There are numerous advantages of a glass fused-to-steel liquid storage tank when compared to either a painted steel or concrete tank design. One of the most powerful economic advantages is the fact that the glass coating never requires repainting, it is permanent. The dollars saved from not having to repaint a painted tank or repair aged concrete can be funneled to other projects in a municipality.

Flexibility - The bolted design and erection of this product yields flexibility that no other tank can offer. Because manufacturing is completed in a factory, large staging areas needed when a product is manufactured on site are eliminated. The erection of the tank can typically be completed with a cleared area of roughly 6 – 10' around the tank diameter. This reduced site clearing and leveling can save thousands of dollars on the overall project beyond the price of the tank itself. The panels themselves can be hand carried and assembled in tight locations when required, allowing this tank to be installed in many locations that would be impossible for other tank types. Additionally, a panel can easily be replaced in the event extra manways, nozzles or other components are req'd. Unlike a concrete or welded tank that would need to be torn down if the structure were compromised, this type of tank structure can essentially be considered permanent since any compromised panels can always be replaced.

Sustained Beauty – Another benefit of the glass fused-to-steel coating is the sustained appearance. Because the glass will not chalk, fade or discolor, a community can expect the appearance of

Advantages (cont'd)

their tank to remain for years into the future. While painted tank coatings erode, rust and fade away over time, the glass coating will continue to hold its curb appeal. Unlike concrete tanks that require an exterior coating to prolong the concrete appearance and require the reapplication of the coating over time, to prevent the dark unsightly stains of concrete, the glass coating will hold up to the elements.

Glass fused-to-steel tanks are often placed in areas, where long term visual appearance is desired.

Expandable – Another unique and significant feature of the glass fused-to-steel bolted tank design is the ability for the tanks to be vertically expanded. If a community or industry experiences growth and additional capacity is necessary, the tanks unique jacking process allows the end user to gain this capacity both quickly and cost effectively. The factory certified tank erection crew simply unbolts the bottom ring from the original starter sheet, jacks the tank up and adds the number of rings necessary to achieve the new capacity.

Tank expansions can typically be completed in less than a week and at a substantial savings over having to purchase a new tank to gain the additional capacity. If the possibility of future expansion exists for any community or industry it is recommended that this be considered in the initial project design, so that adequate concrete and rebar can be placed in the tank foundation to support any additional future loading. Because of the superior glass coating, when these tanks are expanded, there is no difference in appearance between the original panels and the new panels. Several communities across the country have had their tanks expanded after 25 years of service with no detectable difference in appearance.

Ancillary Items – The bolted design allows for the easy and simple installation of additional nozzles or penetrations into the tank at any time and eliminates the difficulty this can encounter with other tank designs. Insulation, baffles, special walkways, stairs, platforms and internal equipment can easily be installed if the project design requires it.

Disadvantages

Shapes - The specialized manufacturing process of fusing the glass coating to the high strength steel requires that the steel sheets are capable of being run through a furnace. Steel sheet sizes are limited as a result of this process. As a result, the only design available is a cylinder. Odd shapes are difficult to achieve with this type of construction. If odd shapes are required then welded joints must be considered.

Capacities - AWWA limits the maximum sheet thickness for bolted steel tank designs. This creates a hydrostatic loading limitation on the capacity of the tank structure. This sheet thickness restriction means that typical bolted glass-fused-to-steel tanks are only available in sizes up to approximately 6,000,000 gallons.

Other tank types should be considered for greater capacities.

Other Considerations

Bullet Holes - Because the vast majority of these tanks are found in rural areas instead of major urban areas, some communities are concerned with the possibility of the product being damaged by bullet holes. While it is possible for a bullet to penetrate the high strength steel, the probability of this happening is rare.

While still an uncommon occurrence, if the impact from a bullet were to damage the tank it would typically result in the glass coating being chipped. One could expect the chip itself to be about the size of a coin.

Because the chemical bonding of the coating to the steel will prevent any undercutting of the coating, the simple remedy for this would be to essentially cover the spot with a light layer of sealer. If the impact were significant enough to create any damage to the interior tank coating, the cathodic

Other Considerations (con't)

protection system inside of the tank would protect the steel until any touch-up is performed. If, somehow a bullet did actually penetrate the steel sheets, the repair however, would simply be to ream out the hole and insert a structural bolt. Overall any potential bullet damage to a glass fused-to-steel tank should be considered minimal at worse and should be far easier to repair or address than the potential of having to repaint an epoxy painted tank or to have the windings exposed and structure weakened after shotcrete is shattered from an impact on a concrete structure.

Ice – Unheated structures with little or no turnover have the potential of freezing if exposed to prolonged severe freezing temperatures. The principles of heat transfer ultimately apply to all tank construction materials. In a typical municipal application, the system, by virtue of its operation, provides adequate turnover. If not, this requirement needs to be addressed in the design of any system to ensure that this does not occur. There are numerous solutions available for low turnover, in the event of prolonged extreme low temperature periods. One should seek the advice of their design engineer and tank manufacturer.

Manufacturing Improvements

Edge Coating - Continuing Research and Development of glass coating technology and product performance has yielded significant improvements in glass Fused-to-Steel storage tanks since the product was first introduced in the late 1940's for dry and liquid storage. One of those improvements has been the development of sheet Edge Coating. Prior to this process, the high surface tension of the sharp edges, prevented the glass from adequately adhering to the steel edges.

Edge Coating machine is part of the current manufacturing process.

The sheet edges were filleted with sealer and this became a potential future maintenance issue. As the tanks aged, it could become necessary to clean and reseal the sheet edges for protection against any future corrosion.

Rounded sheet edges with glass coating.

With the goal of making the storage tanks as maintenance free as possible, in the 1990's, AO Smith, developed the Edge Coat process. The sheet edges are now mechanically beveled after shearing, creating a beveled edge surface. The edges are then arc sprayed with a stainless steel. In the final stage, glass slurry encapsulates the steel sheet edges.

Sealer - Additional improvements were made to the sealer used in the erection of the tanks. The sealer was upgraded for enhanced UV exposure and 200 ppm chlorine resistance. The sealer is manufactured exclusively by Manus, Inc. for CST Industries. This improvement has extended the life of the sealer and adds to the minimal maintenance design of the tanks.

Specially formulated UV resistant Polyurethane sealer

Protective Caps - A high impact polypropylene

Exposed Nut/Washer combination prior to protective caps

Manufacturing Improvements (con't)

copolymer protective cap is available to cover the exterior nut - washer combination on the tank of the bolted design. This ultraviolet resin material is ANSI/NSF approved and was added to control the oxidation of the bolt – nut that were previously exposed to the elements and could begin to show signs of streaking on the tank sheets. Although this streaking was capable of being cleaned, it was another potential maintenance issue that the manufacturer wanted to remove.

Maintenance

It is wise to have an inspection procedure instituted as part of the regular maintenance program for all tanks.

AWWA recommends that all potable water storage tanks be inspected every 3 to 5 years. Every system should have a periodic inspection program to ensure that the system is working properly. As with anything, the sooner an issue is addressed, the less chance it has to develop into a catastrophic event.

Scheduled inspections help to ensure that no vandalism or structural concerns have arisen.

No configuration of liquid storage tank should be installed and left to sit alone, without some type of inspection procedure in place This way any serious problems can be avoided. "Neglecting maintenance is the most common cause of structural failure in a storage tank"… This statement applies to ANY type of storage tank.

Glass fused-to-steel tanks have very limited long term maintenance costs. Aside from periodic inspections and powerwashing, the only maintenance item is the periodic replacement of the sacrificial anodes used in the cathodic protection system. The sacrificial anode cathodic protection system is designed specifically for each individual system.

A water sample is taken and the resistivity/conductivity of the water, area of exposed steel surfaces and many additional factors determine the exact number of anodes required to maintain the system for about ten years. Once the anodes have been depleted, they will need to be replaced. This can be accomplished easily when the tank is empty during a scheduled inspection or with the use of a diver.

The National Association of Corrosion Engineers states that as a result of the billions of dollars spent annually on failing infrastructure, that any structure that could benefit from the use of cathodic protection, should use it. Essentially, if there is any steel or rebar associated with a storage tank, cathodic protection should be considered to extend the life of the structure.

Historically, glass fused-to-steel tanks require the least amount of maintenance and associated costs, over the lifetime of the structure, than either painted steel or concrete structures.

Conclusion

Overall, glass fused-to-steel tanks should be considered as a solution to a municipalities or industries liquid storage needs.

The impermeability and chemical resistance of the glass coating means these tanks are well suited for wastewater, landfill and other aggressive industrial applications.

Initial construction costs, anticipated life and long term maintenance costs are all significant factors relative to the various tank designs and materials available today. The long term maintenance costs and life cycle during a tank evaluation all need to be considered when selecting the appropriate product for a specific project.

A properly maintained and inspected glass fused-to-steel tank should be expected to have as long a life, if not longer, than the painted steel or concrete type structures but for much less in maintenance costs. Contact us for further details.

Because project financing can vary depending on several factors, a complete analysis of initial costs and, lower maintenance should help a community decide which type of product is best suited for their needs.

We're on the Web!
See us at:
www.besttank.com

Statewide Aquastore, Inc.
6010 Drott Drive
East Syracuse, New York 13057
Phone (315) 433-2782
Fax (315) 433-5083
E-mail aquastore@besttank.com

Reliable.....Reputable.....Responsible

February 22, 2013

To: The Honorable Mayor and City Council

From: Sharon Addison, City Manager

Subject: Transportation Commission Vacancy

The Transportation Commission has had a vacancy since the passing of Helen Wilson last year. We have received the attached Volunteer Application through the City of Watertown website from Ms. Betsy Penrose.

If the City Council wishes, we will contact Ms. Penrose for appointment to the Transportation Commission to fill the unexpired term of Helen Wilson, such term expiring on April 1, 2013.

Giso, Elaine

From: support@civicplus.com
Sent: Sunday, February 17, 2013 2:55 PM
To: Corriveau, Mary
Subject: Online Form Submittal: Volunteer Application

The following form was submitted via your website: Volunteer Application

Please select all interested organizations:: Transporation Board

Name: Betsy Penrose

Address: 1127 Academy Street

City: Watertown

State: NY

ZIP: 13601

Phone: 786-2249 (work) 786-1704 (home)

Email: bpenroses@gmail.com

Fax:

Organization: Jefferson Community College

Please provide relevant education and experience for the committees on which you are interested in serving.: I have lived in Watertown for over 17 years and I work at Jefferson Community College. I am interested in mass transportation options for city residents and for JCC students as we expand with residence halls.
I am a graduate of JLI and have an undergraduate degree from Penn State and a graduate degree from the University of Southern California.

Additional Information:

Form submitted on: 2/17/2013 2:54:58 PM

Submitted from IP Address: 67.249.47.235

Form Address: http://www.watertown-ny.gov/forms.asp?FID=42

Betsy Penrose

Education

University of Southern California, Master of Science In Systems Management, June 1991

Pennsylvania State University, Bachelor of Science in Mathematical Science, December 1984

Professional Experience

Jefferson Community College **November 1991 to present**

Vice President for Students, January 2007 to present. Supervise Admissions, the Advising, Career and Transfer Center, Athletics, Campus Security, Financial Services, Health Services, the Learning and Success Center (tutoring, accommodative services, placement testing and retention services), Student Activities, Student Records, TRIO Student Support Services, and Marketing and Public Relations.

Director of Financial Aid, September 1998 to December 2006. Oversight of federal, state and local financial aid and scholarship programs. Supervise five full time staff members. Involved in all aspects of administering financial aid to students.

Assistant Director of Financial Aid, September 1997 to September 1998. Oversight of student loan program. Counsel students. Implemented several automation projects including electronic veteran's certification and electronic funds transfer. Various financial aid presentations and student outreach efforts.

Select Highlights at Jefferson Community College

Chaired a successful Title III grant effort for a competitive five year, $2 million federal grant (2011); co-chaired a successful effort in 2001 for a $1.75 million grant under Title III

Co-chair of Jefferson Community College's Strategic Planning (1998 – 2004)

Recognition

State University of New York Chancellors Award for Excellence in Professional Service

William A. Troy Service Award

New York State Financial Aid Administrators Regional Service Award

Presidential Citation – State University of New York Financial Aid Professionals

Personal Contact Information

Home Address: 1127 Academy Street, Watertown, New York 13601
Home Phone: 315-786-1704 Work Phone: 315-786-2249
bpenroses@gmail.com

February 22, 2013

To: The Honorable Mayor and City Council

From: Sharon Addison, City Manager

Subject: Board and Commission Appointments

Below is a listing of current vacancies on City Boards and Commissions for City Council review.

We are presently checking if there is any interest in the Board of Assessment Review.

Regarding the Board of Ethics, if Council wishes, Staff can be of assistance in contacting members for reappointment. James Mills, City Comptroller, is willing to serve as the City Officer replacement.

Board or Commission	Appointed By	Term	Name of Member	Date of Appt.	Term Expires
Board of Assessment Review	Council	5 Years	Linda J. Fields	7/18/2011	9/30/2016 Resigned
Board of Ethics	Council	1 Year	Rande S. Richardson	11/7/2011	12/31/2012
Board of Ethics	Council	1 Year	James St. Croix	11/7/2011	12/31/2012
Board of Ethics	Council	1 Year	Arthur C. Stever, III	11/7/2011	12/31/2012
Board of Ethics	Council	1 Year	Mary M. Corriveau	11/7/2011	Resigned
Board of Ethics	Council	1 Year	Frank A. Seminerio	11/7/2011	Moved

COMMUNITY ACTION PLANNING COUNCIL OF JEFFERSON COUNTY, INC.

Head Start/Pre-K • Housing & Energy Services • Jefferson-Lewis Childcare Project • Family Center

OFFICE OF CITY MANAGER
FEB 28 2013

February 27, 2013

Ms. Sharon Addison, City Manager
City of Watertown
245 Washington Street, Room 302
Watertown, NY 13601

Dear Ms. Addison,

Thank you for taking the time to visit the Community Action Planning Council. I always appreciate the opportunity to share the Community Action story, and our students thoroughly enjoy guests, especially those with a knack for reading. Please feel free to visit again!

As we discussed, the Community Action Planning Council receives funding through the Community Services Block Grant (CSBG), a federal program that is administered through the Department of State. The fund provides assistance to Community Action Agencies to alleviate poverty, revitalize communities and empower low-income families to become self sufficient. One of the requirements of the CSBG program is the implementation of a tripartite board of directors. The board of directors must be comprised of the following:

- One third is made up of low-income individuals or representatives of low-income populations living within specific geographic sections of the area served. These individuals are chosen by the democratic selection process.

- One third are representative of the private sector, including members from business, industry, labor, religious organizations, law enforcement, education and other community groups.

- One third of board members are elected public officials, holding office on the date of the selection, or their designated representatives.

As our by-laws reflect, the practice has been to seek four elected officials - or their designees - from the Jefferson County Legislature and three from Watertown City Council. Our monitoring agent from the Department of State recently brought to our attention that the public sector of the board is out of compliance. The public sector members representing City Council have letters on file indicating that the City Council, as a body, appointed each to serve on the board of directors. It is recommended that this situation be remedied by seeking specific elected officials to sit on the board, and if the elected official is unable to, then he or she should ask a specific person to be the designee. It is expected that the designee will communicate with the elected official, periodically providing information on the board's activities and the agency's impact on the community.

The individuals who currently represent City Council are Stanley Zaremba, Christina Stone and Thomas Bruno. As we discussed, we are requesting that members of City Council be polled to see if any are interested in serving on the board. If not, we are hopeful that individual members of City Council would be willing to appoint these individuals to serve as their designees and serve out their remaining terms through December 2013.

We recognize that it is an unrealistic expectation that three City Council members either serve on the board or appoint designees. Moving forward, it is our intention to encourage the board of directors to revise the by-laws to allow the consideration of other elected officials, such as town clerks, judges, members of the board of education, etc.

I appreciate your efforts in helping to bring our board composition into compliance. Please let me know what additional information I might provide to help facilitate a resolution.

Sincerely,

Melinda Gault

Melinda Gault
Executive Director

Jefferson Community College
New Events Center Feasibility Study

Final Report

Submitted to:
Jefferson Community College
Office of the President

Submitted by:
Paradigm Economics

February, 2013

Table of Contents

Statement of Limiting Conditions

Introduction

Executive Summary

I. Preliminary Strategic Analysis and Project Definition

II. Analysis of Existing Industry Condition

III. Marketability Survey

IV. Identification and Implementation of Facility Management Options and Preferred Management Scenarios

V. Economic Impact Analysis

STATEMENT OF LIMITING CONDITIONS

Indoor Athletics/Events Facility
Development Planning Study

The consulting study is subject to the following limiting conditions, except as otherwise noted in the study:

1. The conclusions stated in the comprehensive analysis and market research study apply only as of the date indicated and no representation is made as to the effect of subsequent events on the study.

2. By reason of this assignment, Paradigm is not required to give testimony or be in attendance in court or any government or other hearing with reference to the study without written contractual arrangements having been made relative to such additional employment.

3. Neither all nor any part of the content of the report shall be disseminated through advertising media, public relations media, news media or any other means of communication including without limitation prospectuses, private offering memoranda, and other offering material provided to prospective investors without the expressed written consent of the client, and the client at all times shall control the means of materials distribution, shall authorize and verify intended recipients, and shall be able to use its discretion to provide summaries and related materials editions in place of full report copies.

4. Information, estimates and opinions contained in this report, obtained from sources outside of our office, are assumed to be reliable and may not have been independently verified.

5. The analyses contained in this study incorporate numerous estimates and assumptions regarding market performance, general and local business and economic conditions, the absence of material changes in the competitive environment and other matters. However, some estimates or assumptions inevitably will not materialize, and unanticipated events and circumstances may occur. Therefore, actual issues, outcomes and results experienced during the period covered by the enclosed analyses are likely to vary from our estimates, and the variations may be material.

INTRODUCTION

Jefferson Community College (Watertown, NY) is endeavoring to determine and prioritize options and optimal opportunities for expanding and upgrading its inventory of on-campus athletics-recreational-educational facilities through the development of a new multi-purpose events center at a preliminarily-identified location at the main school entrance off of Coffeen Street.

It is the intent of the College to evaluate new athletics facility capital investment options that will allow the school to both upgrade its overall on-campus indoor facilities inventory for the benefit of on-campus athletics and non-athletics users, and to also provide incremental access of an enhanced facilities inventory to the local and regional Jefferson County market that maximizes overall facility utilization while at the same time generating targeted revenue on an annual and predictable basis.

The College determined that engaging professional athletic facility consulting experience at the inception of its new events center development planning process was a prudent step in assuring that objective and comprehensive assessments and decision-making were integral to all aspects of facility design, development, and utilization decisions. To that end, Paradigm Economics of Buffalo, NY, was retained to perform a front-end feasibility study for the College and, by association, any design, engineering, and construction team that the College might choose to engage in the future.

The work performed by Paradigm focused on its ability to conduct a comprehensive feasibility study, including business/management option modeling and economic impact analyses that would contribute to the overall strategic, development, and operational analysis for the proposed Jefferson Community College decision-making process.

Paradigm Economics was engaged to provide professional consulting services to the College in the general areas of local and regional market demand analysis, competitive and comparable venue market research and data analysis, estimation of projected facility operating considerations and revenues, and development of recommendations and conclusions related to overall development priorities, phasing, and business modeling.

During the course of the study, Paradigm provided professional services that addressed the following primary project tasks within the overall scope of services:

I. Preliminary Strategic Analysis and Project Definition

II. Analysis of Existing Industry Conditions Marketability Survey

III. Marketability Survey

IV. Identification and Implementation of Facility Management Options and Preferred Management Scenarios

V. Economic Impact Analyses

EXECUTIVE SUMMARY

INTRODUCTION

In Q3 of 2012, Jefferson Community College engaged Paradigm Economics to conduct a feasibility study to identify, evaluate, and analyze key public assembly facility industry, competitive, and market characteristics that would impact the school's decision-making process as that process pertained to the potential development, ownership, and operation of a new on-campus indoor events center. Additionally, a secondary component identified as a single-sheet indoor ice rink was initially included in the overall analysis.

Specific components of the feasibility study work scope were identified and accepted as follows:

I. Preliminary Strategic Analysis and Project Definition

II. Analysis of Existing Industry Conditions

III. Marketability Survey

IV. Identification and Implementation of Facility Management Options and Preferred Management Scenarios

V. Economic Impact Analyses

Anticipated output for this work effort was confirmed to include a full competitive facility industry research effort and analysis, an articulation of regional market demand and user group opportunities, histories, and challenges, a set of financial performance models representing key assumptions related to selected building component operations, management model options and comparisons based on anticipated JCC facility functional components, and economic impact figures representing impacts generated by facility construction and business operations.

PRELIMINARY STRATEGIC ANALYSIS

Paradigm conducted a series of preliminary Jefferson County market contact interviews in order to identify, solidify, and organize key strategic information and issues that would inform the feasibility study research and analysis process, while at the same time identifying economic and non-economic goals and objectives for the proposed development project and its long-term operation. The

interview process included JCC school officials, and representatives from local economic development and business development offices, foundations and potential project funding sources, as well as from live entertainment and youth/rec sports programs.

Key project goals were determined through this process to be as follows:

- Establish JCC as a key regional activity focal point;
- Enhance the academic capability of JCC;
- Enhance the JCC intercollegiate athletic capability;
- Identify creative project financing options;
- Determine an optimal multi-purpose events and rec sports activity strategy;
- Identify the best complementary option for a new JCC events center complex within the existing Jefferson County sports, rec and event facilities inventory; and
- Contribute to the overall marketability of Jefferson County and North Country.

Identified strengths for the proposed project included access to available land on the JCC campus, absence of real indoor event facility competition within the regional market, demonstrated success within the market in the area of live ticketed entertainment event hosting, incrementally improving private sector investment and economic development in Jefferson County over the last 10-year period, and both project advocacy as well as educational opportunity benefit that JCC itself brings to the overall project analysis and potential development project investment effort.

Weaknesses that were identified were articulated as being a relatively isolated geographic market, lack of a dense and significantly-sized population base, seasonal and sometimes negative weather conditions, a lack of local depth with respect to live event promotion, relatively small local youth hockey membership numbers (as they pertain to new indoor ice sheet analysis), and the potential for less-than-optimal financial performance as a result of low-use and/or low-rent realities driven by the relatively small and isolated nature of the Jefferson County market.

Opportunities identified that were of importance to new events center development in particular included the lack of similar identified development projects in the North Country region, the current availability in the U.S. of live music entertainment in particular that is in alignment with demonstrated market demand, access to geographically proximate college-age audiences that have an

appetite for live entertainment, and leveragability of the geographically proximate Canadian and military markets.

Identified threats that are key include the volatility of the domestic economy and its impact on the ticket-buying and rec sports markets, an inability to control or influence the increasing degree of vertical integration taking place within the touring entertainment industry, and the increasing cost of primary construction materials (esp. structure steel, concrete, and similar).

ANALYSIS OF EXISTING INDUSTRY CONDITIONS

The existing industry conditions analysis for the JCC facility development project was initially comprised of indoor events center and single-sheet indoor skating rink components. During the course of initial research and analysis in this task area, that assessment was broadened to also include an indoor all-weather turf field component assessment.

At the NCAA Division I level, indoor arena projects have proliferated in the U.S. over the course of the last 20+ years. Typically, such projects have been in the $50 million to $200 million dollar range, for a fixed-seat arena with seating capacity of 5,000-12,000. Closer to the proposed project budget and facility type anticipated by JCC, "fieldhouse" facilities with some type of live event and revenue-generating emphasis are more prevalent at the Division II and II and community college levels. In NYS, recent projects at Binghamton University, SUNY IT, SUNY Canton, SUNY Brockport, MVCC, and OCC represent the latter type of fieldhouse facility project, with OCC and Binghamton representing "enhanced fieldhouse" models that have design characteristics that allow for live event activity beyond intercollegiate athletics, recreation and intramurals.

Additionally, projects of this fieldhouse type were identified in a set of non-NYS markets; Calvin College ($50 million), Kenyon College ($70 million), and the University of St. Thomas ($60 million) are examples of lower division schools that financed campus facility projects having some combination of indoor facility type components, some degree of community partnering, and a variety of traditional and non-traditional project funding characteristics.

From that set of industry comparables, and particularly with respect to the NYS schools, a subset of facilities with multi-purpose event capability indicate that designing for multi-purpose event activity and revenue generation has an impact on overall project cost, and that true "arena" facility capability can be approximated to a degree, but not truly achieved, due to project funding limitations that are typically inherent at smaller campuses lacking a Division I athletics program as a focal point.

To confirm the assumptions and facility/project characteristics articulated above, the project team participated in varying combinations in first-person walk-throughs at Binghamton University, SUNY Canton, SUNY IT, Mohawk Valley CC, and Onondaga CC. Interviews with athletics directors and building managers allowed the project team to develop both its knowledge and project research base is they pertain in particular to the "enhanced fieldhouse" events center model (design, cost, operations, management, programming) that is the focus of the JCC new facility study.

In the U.S., indoor skating rink projects tend to be major college hockey program or municipally-driven in all but the largest metropolitan markets. This is due to the high cost of construction and high cost of operation exhibited by these facilities, relative to other types of indoor and outdoor community rec sports facilities that serve local or regional markets and skating programs.

The investment and operational risk typically inherent in these rink projects is evidenced at a variety of newer NYS indoor skating development projects; Northtowns Center at Amherst, BIG Arena (Albany), Cicero Twin Rinks, The Sports Centre (Rochester), and the Lysander Rink (Syracuse) have all experienced either some degree of financial performance disappointment and/or, in some instances, bond default or complete building closure and eventual repurposing. Overinvestment in facility, lack of key skating program support, and the inability of markets to absorb necessary ice time rental increases are key project/facility characteristics that oftentimes have a negative impact on projected financial performance. Even NYS markets with $200+ ice time rental rates can find themselves unable to cover operating costs and debt service, due to the combination of high building and operational costs.

Population characteristics are typically key indicators of a market's ability to support the cost of ice rink development and ongoing operation. As indicated above, larger markets in NYS with large youth hockey program memberships have in some instances proven to be incapable of sustaining newly-built facility operations at a projected level in either the early years (Northtowns Center) or at all (The Sports Centre). The Watertown and Jefferson County market was found during the course of study research to have a smaller population, lower per capita income, a smaller youth hockey membership, and lower ice rental rate tolerance than many of the newer NYS rinks that have exhibited financial performance challenges in the past 10-year period.

With respect to indoor turf field facilities in NYS, this facility type has had a more positive recent development and operating trend than has had indoor ice rink complexes. Because these facilities are less expensive to develop, less expensive to operate, and more flexible with respect to the types of recreational

programming that they are able to host, there is a far lower incidence of financial difficulty, foreclosure, or repurposing with these venues. These facilities are almost exclusively owned and operated on a private for-profit basis, as evidenced by major concentrations of these facilities in major NYS markets including Buffalo, Rochester, Syracuse, and Albany. Another significant nuance of indoor turf field ownership and operation is the requirement that building management and staff be proficient at developing and managing in-house programming (leagues, tournaments); this is in contrast to indoor skating venues, where the facility typically functions almost exclusively as a "rental hall" that rents out ice time by the hour on a passive as opposed to aggressive basis.

The JCC master plan supports the school's intention of including a 34,000 SF Higher Education Center (HEC) within the plan for the new facility development project. Adding classroom space, space for targeted new programs, and opportunities to generate 4-year program partnerships complements the intention of the proposed events center project component. Also, inclusion of the HEC component within the events center funding plan will create advantages for the school in its effort to secure financial support from NYS for the project.

MARKETABILITY SURVEY

A primary exercise for the marketability survey component of the study project was to compare the characteristics of the indoor turf field and indoor ice sheets options, so as to identify both economic and non-economic cost-benefit assessments that can be made. As a result, this analysis determined that the indoor ice sheet option was more a "want" within the market than a "need", and was not supported by incremental user demand that could be identified, or by incremental revenue that might be generated by that use that would be necessary to offset anticipated annual operating expenses at a JCC rink location. Additionally, as the school has no intention at this time of adding men's and women's ice hockey programs to its intercollegiate athletics offerings, the ice sheet option does not support the JCC athletics, recreational, or intramural mission.

The indoor turf field option, however, is aligned with JCC athletics, rec, and intramural programming needs, and, if constructed at a size capable of accommodating higher level soccer and lacrosse play in particular, would fill a currently unmet need within the Jefferson County/North Country marketplace. This could be done at a construction cost lower than that of single-sheet ice rink, and also at an annual operating cost that would be lower than that incurred by an ice rink. Therefore, the rink-turf discussion resulted in the indoor turf field option being seen as having many more positive purposes and outcomes, both economic and non-economic, than the rink option at this time.

With respect to events center marketability, there seems to be no doubt that a new, large-sized venue with some greater level of seating capacity for ticketed events is being called for within the local market. The ice arena and the State Office Building, while inexpensive to utilize and relatively available for local event bookings, have limited utility as contemporary entertainment, meeting, and special event venues. JCC campus users (JCCSA, athletics, other) indicate a need for a new venue for campus-related events and activities. Likewise, existing local venue users such as the DPAO and Amp Entertainment indicate that they have a need for a more hospitable and larger indoor venue into which they can books touring entertainment, and that they would make aggressive use of such a venue if it were available to them and if it were in the range of 5,000 seats in size. Similarly, the local Chamber has indicated a similar need for a larger flat-floor venue for shows, banquets, and similar events that would complement spaces currently available to it in the local market.

Non-local users representing touring entertainment including family shows, concerts, circuses, and specialty sports (basketball, rodeos, wrestling, similar) have traditionally been reluctant to take financial risk in smaller, isolated, seasonal markets such as Central New York and therefore, by extension, North Country. As promoters become increasingly risk averse and reluctant to accept 100% of financial risk on shows that they place, they concentrate on "sure thing" markets and venues, and/or insist on venues accepting a certain amount of financial risk on shows by requiring them to co-promote shows by absorbing their own facility expenses and sharing in available show profit after all expenses have been paid. It is likely that Jefferson County will be challenged to attract "big name" events of this type, and its ability to do so may ultimately hinge on the event center's ability to accept a significant degree of financial performance risk as it relates to ticket sales and event-related costs.

Extensive financial modeling was engaged in that considered both the events center and an indoor turf field facility as separate but complementary operations. On an "all-in" enterprise basis, events centers typically have limited ability to generate revenues that are capable of meeting both operating expense and debt service payments, that is, they require annual operating subsidies to function. This was the preliminary finding for the JCC events center. Impacting assumptions in this calculation included relatively low numbers of outside events, a lack of "contract" anchor tenants, and a conservative attitude towards the regional event market's ability to accept and absorb relatively higher facility rental rates than those that it is historically used to. However, an operating budget can be legitimately recalculated so as to offload certain facility operating expenses to the owner's, in this case the school's, general operating budget. This sensitivity adjustment was applied to the JCC events center preliminary operating budget, creating a more palatable year-end net cash flow position for the events center facility.

Additionally, the same exercise was applied to the indoor turf field facility component of the project. While a "fully-loaded" operating budget might make it difficult for the turf field itself to achieve break-even under a conservative operating scenario, by shifting an identified set of routine expenses to the college, positive net cash flow can be achieved if certain user and rental rate assumptions are proven out in combination, and this positive net annual cash flow, if achieved and if of a significant enough size, can be utilized to help offset any annual operating deficits that might be incurred by the events center facility.

IDENTIFICATION, EVALUATION, AND COMPARISON OF FACILITY MANAGEMENT OPTIONS AND PREFERRED MANAGEMENT SCENARIOS

Maximization of local and regional use, attracting of social, business, and live entertainment events, and accommodation of school athletics programs are all priorities for the anticipated JCC events center-indoor turf field combination. Challenging and changing industry and market dynamics will make successful management of both facilities a critical priority for the school. Therefore, accuracy in identification, implementation, and execution of an appropriate business/management model will have a considerable impact on overall financial performance.

As evidenced by business models and management plans in effect at comparable project schools such as Binghamton University, SUNY Canton, and OCC, a variety of management model options are available to JCC decision-makers. Outside management would seem to be an over-reach based on the cost of such expertise, and the relative return that the facilities might expect from it. However, because interaction with the outside touring entertainment industry will be a prerequisite for effective booking of the event center in particular, acquiring such industry expertise through the hiring of an industry professional would seem to be a preferable, if not necessary, option, one which has been recently implemented by OCC at their new SRC Arena.

Likewise, the turf field component will require field sports program expertise in particular in order to maximize its economic and non-economic goals and impacts. Based on consultant interviews with the market, it appears that legitimate soccer program management expertise in particular does exist in the local market, and it would seem that such expertise and local market knowledge could be leveraged within a comprehensive facility management model that imbeds the turf field facility operation within an overarching facility management umbrella overseen by an events center manager and staff.

ECONOMIC IMPACT

Measurement of economic impact can help validate economic development project decisions from both a construction and ongoing business operations basis. By using recognized input-output modeling tools such as IMPLAN, the larger economic impacts of development project investment and business operations success can be assessed and utilized to inform strategic decision-making as it relates to any size of project and business operations investment.

As indicated by the IMPLAN model, an anticipated $44.3 million investment in a JCC events center construction project will have a total economic impact effect of $54,591,408 when direct, indirect, induced impacts are calculated and considered.

Similarly, projected events center and turf field complex operations generating a combined $2,030,000 in annual operating revenues will have a total economic impact effect of $2,699,000 when direct, indirect, and induced impacts are calculated and considered.

Additionally, the direct impact of potential "tourism spending" generated by projected attendees at the events center can be calculated manually using estimations of daily per capita spending. 10% of projected event center attendees, if identified as being non-local and staying overnight when they attend events, would spend $3,284,250 if a daily spend rate of $150 was applied to each. This type of impact calculation could be refined and run through the IMPLAN model if surveys were conducted of visitors to the Jefferson County market so as to capture their actual daily expenditures for lodging, food, retail spending, and entertainment.

I. PRELIMINARY STRATEGIC ANALYSIS AND PROJECT DEFINITION

The first step in Paradigm project work and information gathering was to conduct interviews on campus with College personnel representing administration, facilities, and on-campus services. The purpose of this effort was to confirm the school's vision for and description of the proposed facility development project, and to also establish as a "zero point" in Paradigm work any preliminary and/or informal effort expended on behalf of the project by the College and its interested supporters.

Additionally, it was important and necessary for Paradigm to get a visceral understanding of the project's intent for and impact on the JCC campus proper, by conducting a walk-through of the campus, current athletic facilities, and contiguous facilities within an impact radius of the proposed new facility's designated location and eventual development.

Information gathered from JCC representatives in these areas was considered to be critical in providing an initial basis for identifying the key priorities, issues, and criteria representing the senior administration in particular, the athletics department and campus programs, and campus facility planning and operations.

The walk-throughs of current on-campus facilities provided Paradigm with an understanding of existing facility age, functionality, utilization, and proximity.

Methodology

Paradigm conducted preliminary primary project interviews, secondary data, research, and report reviews, and target comparables site visits and operator interviews in order to construct an initial project dialogue and to also establish identifiable project goals, issues, and considerations that would in the aggregate serve as a key set of guidelines that would direct ongoing project research and analyses, as well as information-based client decision-making.

An inventory summary of interviews, materials review, and comparables visits that were conducted as part of the preliminary strategic analysis and project definition phase of the JCC feasibility study project is presented as follows:

Preliminary primary project interviews:

- Don Alexander – JCIDA;

- Joel Bartlett – Town of Watertown;
- Frank Doldo – JCC student activities;
- Carole McCoy – JCC president;
- Lynn Pietroski – Greater Watertown Chamber of Commerce;
- Jude Renzi – Renzi Brothers Foods;
- Joe Rich – Disabled Persons Action Organization (DPAO);
- Rande Richardson – Northern New York Community Foundation;
- Don Rutherford – Watertown LDC;
- Dan Villa - JCC board of trustees;
- Jeff Wiley – JCC athletics.

Secondary materials review:

- City of Watertown Ice Arena Study (Bernier Carr & Associates);
- Jefferson County Survey of the Community – June, 2012 (The Center for Community Studies at JCC):
- Jefferson Community College – Facilities Master Plan;
- "Watertown Ice Arena: Community Needs and Potential" (Watertown Hockey);
- JCC Preliminary New Construction Site Plan (Bernier Carr Group).

Target comparables site visits:

- Mohawk Valley CC;
- Monroe CC;
- Onondaga CC;
- SUNY Canton;
- SUNY IT.

Preliminary Analysis – SWOT Format

Initial project research, data, and dialogue was evaluated in a fashion so as to produce preliminary analytical comments that represented extrapolations and interpretations from both primary and secondary information, with the intention of "setting the table" for the project's formal research and analytical effort by providing a strategic prism through which this research and analysis could be evaluated. The SWOT format (strengths, weaknesses, opportunities, threats) was utilized primarily in order to provide a standardized framework within which to organize these preliminary analytical and strategic statements and findings.

In addition to the four SWOT categories, a category for strategic and tactical *project goals* was summarized also, so as to capture the short- and long-term and economic and non-economic intention for the proposed facility development project.

This preliminary analysis is presented in summary fashion as concluding material for this study section.

Project Goals

- Establish JCC and its campus as a focal point for regional community special events and entertainment activities;

- Enhance the academic capability of JCC as an institution of higher learning;

- Enhance the JCC intercollegiate athletic program capability, and by doing so increase the opportunity for the school to improve its reputation as a preferred choice for community college intercollegiate athletic consideration and participation within the New York State community college competitive environment;

- Identify creative project financing options that will consider and potentially minimize long-term fixed financial obligations related to overall development project financing and both hard and soft construction costs;

- Determine an optimal multi-purpose events and activities strategy that will maximize revenue generation and minimize ongoing operating expenses, through development and implementation of a varied and consistent schedule of ticketed entertainment, contract user programs, complementary tenant businesses and their operations, and regional public and private trade show business and private and public sector business functions;

- Position a new JCC-located multi-purpose events center as a *complement* to the current inventory of Jefferson County and North Country indoor and outdoor recreational sports and live entertainment venues and business operations; and

- Contribute to the overall marketability of Jefferson County and North Country as a hospitable geographic location for residential living, for work, for business relocation, development and growth, and for post-secondary education.

Strengths

- JCC has access to a 43+-acre geographic location, otherwise known to the community as "Whispering Pines", at the entrance to the JCC campus that will be "shovel ready" and optimally located for maximum visibility and vehicular and patron access for and to a new public assembly facility project;

- Absent consideration of inclusion of an indoor sheet of ice at the facility, there is no legitimate indoor live event/entertainment facility competition within the local/regional market for the types of non-intercollegiate athletic and recreational events and activities that the new facility would propose to host. Additionally, alternative non-entertainment and non-skating facility component options such as a large indoor all-weather turf field facility would seem to have a use and place within the regional indoor facilities market, and would therefore be worthy of analysis;

- The market has some evidence of consistent historical success in hosting live ticketed music events (DPAO, AMP Entertainment);

- Over the last 10+-year period, there has been significant private sector investment in the Jefferson County market in the areas of local/regional retail and hospitality trade business by local, NYS, and national developers and business operators, and this investment is believed to be both an indicator of and precursor for improving demographic and economic market strength in the region;

- Non-"entertainment space" areas designated for JCC educational use that are currently proposed for the project may be capable of generating atypical lease and/or rental space opportunities that can contribute to a unique revenue line item in the proposed facility's overall annual operating budget;

- JCC's position as the "prime mover" behind the project affords advantages that previous iterations of local/regional indoor facility proposals have not had, and this position has engendered positive attitudes and at least preliminary shows of support from regional event, economic development, and program provider entities whose ongoing support and participation would be necessary for the project's project financing, development, and operational success; and

- Regional public sector economic development and related entities indicate that they have ideas, contacts and resources at their disposal that might be useful to the proposed project, and that these ideas, contacts and resources would most certainly be made available to the project if and when the feasibility of as well as the project financing and development plan for the project are fully articulated.

Weaknesses

- The location of Jefferson County "off the beaten path" of touring entertainment may limit the ability of a new indoor facility of any type to attract novel live entertainment to the market consistently and/or in any great number;

- The demographic population of Jefferson County and North Country is potentially not of enough of a density so as to be a significant attraction for outside risk-taking live entertainment promoters;

- The potential for severe winter weather in North Country may be a limiting factor for indoor live entertainment activity opportunities during the October-March/April touring entertainment season;

- Reliance entirely or significantly on the DPAO for regional concert promotion activity may be uncertain and perhaps questionable strategy within that particular event category;

- Regional youth hockey membership numbers are relatively small and, despite an ongoing desire for more local ice time and access to more preferential ice hours, may not warrant investment in a relatively expensive to both build and to operate facility/facility component type;

- The intention of multiple purposes for the facility may create marketing and scheduling tensions and conflicts between target campus and non-campus events, activities, and users that will disallow the maximization of activity by the outside live ticketed event and public-trade show categories that have the potential to generate the most rental and ancillary revenue for the building; and

- Estimated financial performance that is determined by the study process, and/or that would be ultimately realized by a completed development project and eventual business operation, might not have the ability to satisfy the project finance and investment criteria that lenders and other funding sources might expect and demand from the project.

Opportunities

- Take advantage of lack of any other new indoor facility project announcements for the geographic area within a 50+-mile radius of Watertown;

- Take advantage of a static indoor skating facility market (other than proposed fairgrounds facility renovation) within a 50+-mile radius of Watertown;

- Leverage relative availability of smaller-venue touring music concerts that are currently plentiful on a coast-to-coast basis in the U.S.;

- Leverage propensity of college-age audiences (i.e. Watertown, Oswego, Canton, Potsdam, Syracuse, other) to travel longer distances to access live music performances than do other age-specific target demographic markets;

- Leverage the propensity of college-age students to attend ticketed entertainment events, based their exposure to a higher volume and more consistent calendar of live entertainment that is targeted to their age demographic;

- Leverage the accessibility of the Canadian market, which has exhibited a recent and strong propensity for shopping in the Watertown retail market, and utilizing the Watertown airport;

- Leverage the regional military family market, which tends to look for and take advantage of moderately-priced and name-brand retail, entertainment, and recreational opportunities; and

- Take advantage of subset of unique investment/project financing vehicles (i.e. EB-5, similar) currently available to the market as a result of an otherwise tight credit market.

Threats

- Weak overall domestic economy may make a regional ticket-buying public reluctant to spend disposal income on seasonal live entertainment;

- Ongoing consolidation and vertical integration within the touring live entertainment industry may marginalize small-market event opportunities, making investment in these smaller markets less and less attractive to industry "players" from an economic risk-reward perspective; and

- Increasing cost of basic construction materials (esp. structural steel, concrete, similar) may cause a construction project to become cost-prohibitive if recent (last 4+ years) trends continue.

Summary Comments – Section One

The preliminary strategic analysis and project definition section of the JCC feasibility study is intended to identify and analyze the obvious, important, and useful contacts, research, and key project objectives that can and will inform the main project research and analysis effort. By conducting key market contact interviews and conducting preliminary primary and secondary research, Paradigm is able to formulate a plan and set of criteria for evaluation of future section research that will keep project questions and analysis framed within well-defined perspective, with that perspective focused on client-specific and market specific goals, objectives and characteristics. The goals and SWOT analysis formulated in this section will be applied in future section summaries, so that the research and analysis presented in those sections is continuously tied directly back to the project goals and SWOT considerations articulated here.

II. ANALYSIS OF EXISTING INDUSTRY CONDITIONS

The Jefferson Community College new facility development project study has contemplated from its inception the primary objective of financing and developing a new on-campus multi-purpose "arena" facility, as well as the potential inclusion of a secondary facility component that was preliminarily identified as an indoor single-sheet ice skating surface, the initial assessment of which in turn broadened to include the possibility of an indoor all-weather turf field surface in place of the single-sheet skating component.

In order to create an objective and inclusive database of qualitative and quantitative information that would serve as the conceptual backdrop for these three distinct and potential project components, it was necessary for Paradigm to conduct a thorough analysis by distinct industry area that would identify and articulate strategic, design, development, management, utilization, financing, and marketing trends, standards, and benchmarks that could be utilized by JCC in its own conceptual and strategic decision-making processes.

Therefore, analyses if existing industry conditions were conducted in three distinct facility-type areas as follows:

A. Small-to-mid-sized college-university fieldhouse/arena facilities;
B. Indoor skating facilities; and
C. Indoor all-weather surface turf field facilities.

A description of higher education center component intent and characteristics is also included so as to address all aspects of the proposed construction project.

A. Fieldhouse/Arenas Facility Industry – Existing Conditions Analysis

General Development and Operations Analysis – College and University Arenas and Fieldhouses

At the national level, Paradigm project experience and monitoring of on-campus athletics facility projects indicates that over the last 5-10 years, the incidence of new arena project and/or large-sized fieldhouse projects has lessened on a relative and absolute basis when compared especially to the building surge that was prevalent in the late 1980s and throughout the 1990s.

"Arena" projects, if defined as indoor facilities with spectator seating composed primarily of a poured concrete seating bowl, single or multiple circulation areas

and concourse dedicated to game-day fan movement and services, and either exclusively or primarily with permanently-affixed individual seats with seat backs and armrests (as opposed to basic bleacher seating), continue to be evidenced at U.S. colleges and universities, but these projects are being committed to primarily at the NCAA Division I level (ex. University of Oregon, University of Nebraska, Towson University, other). Seating capacities for such facilities are typically in the 7,500-12,500 seat range; the goals of these new facilities are to help elevate the play of men's and women's basketball teams to national prominence such that they can be competitive both within their respective member conferences and also for end-of-year tournament play.

On a total and cost-per-seat basis, the overall development cost for such new college and university arena facilities can vary greatly (University of Oregon - $220,000,000 for 12,500 fixed seats, Towson University - $68,000,000+ for 5,200 fixed seats, Auburn University - $60,000,000, 9,600 fixed seats).

Alternatively, renovation projects at existing indoor arena facilities have been considered and carried out at a lesser cost-per-square foot (SF) and/or cost-per-fixed seat at a number of Division I schools (University of Michigan, Purdue University, other) than the school would have incurred for a new on-campus arena project.

Operational and financial performance intentions for new on-campus arenas can but are not always focused on supplementing intercollegiate athletics activities with revenue-producing outside ticketed events and other building rentals, and design of business model and management model choice (i.e. athletics department oversight, facility industry individual and campus employee, outside management company contracted to run building operation) are both typically aligned with the targeted level of outside event, marketing, and financial performance goals and expectations.

In New York State, NCAA Division I programs have not participated in the historical on-campus indoor arena-building trend, and have committed to smaller renovation projects on a limited basis. Established basketball programs (Syracuse University, University at Buffalo, Colgate University, Canisius College, St. Bonaventure University, RIT, University of Rochester, other) have all stood pat with their existing indoor "arena" facility inventory, while there is some small evidence of campus facility renovation project financial commitment (Niagara University).

If we define a *"traditional fieldhouse facility"* as a simple indoor athletics structure designed with some degree of retractable perimeter seating and a flexible rectangular floor that can accommodate a variety of court sport activities through the application of multiple on-floor striping patterns, then those type of facilities

have exhibited a greater degree of prevalence both nation-wide and in New York State than have true arenas. This can be explained as follows: (1) they fit better with campus intercollegiate athletic, recreational athletic, and campus intramurals needs at the community college, and NCAA Division II-III levels, (2) they are more affordable on both an absolute and cost-per-SF basis, and (3) they have the ability to more readily integrate school, public sector, and private sector activity, event, and related facility and business component interests that afford opportunities for creative project financing, facility ownership, and facility operations involvement and combinations.

Compared to a *traditional fieldhouse facility*, an "*enhanced fieldhouse facility*" typically differs as a result of its design and overall development project investment, and additionally and in many cases as a result of both its business model and financial performance intent.

An "*enhanced fieldhouse*" in many if not most cases attempts to combine the low cost of a *traditional fieldhouse facility* project with multi-purpose use/event capability that extends outside of the traditional campus event universe and into an "arena" or "public assembly facility" event universe that includes revenue-producing ticketed event programming (music concerts, family shows, high school and exhibition sports, similar) as well as flat-floor event capability (trade shows, seated large-scale dining, speaker series, etc.).

In New York State, such "*traditional fieldhouse facility*" and "*enhanced fieldhouse facility*" development projects have had a higher incidence recently than have true on-campus arena projects. Specifically, within both the private school and public school cohorts, new facility development projects that fall under the general description of "fieldhouse" as opposed to "arena" have taken place at schools including but not limited to Binghamton University, SUNY Brockport, SUNY Canton, Ithaca College, SUNY IT, MVCC and Onondaga Community College.

Comparable Projects Identification and Analysis

For the JCC feasibility study project, Paradigm designed a "fieldhouse" facility and "arena" comparable projects capture program that included analysis of industry trade materials, internet-based publication notifications, and other targeted secondary research.

Through extensive use of this program and analysis of information that it captured, a variety of similar New York State and non-NYS collegiate facility development projects were identified that formed the basis of the Jefferson Community College consulting project's comparables identification and analysis component.

These identified schools were primarily at the Division III and community college levels, and are summarized as follows:

Binghamton University
SUNY Brockport
Calvin College (Grand Rapids, MI)
SUNY Canton
SUNY Institute of Technology
Ithaca College
Kenyon College (Gambier, OH)
Mohawk Valley Community College
Ohio Wesleyan University (Delaware, OH)
Onondaga Community College
Rockland Community College
University of St. Thomas (St. Paul, MN)
Wartburg College (Waverly, IA)

The roster of comparable schools/projects includes one Division I school, nine Division III schools, and three community colleges. A number of these schools had facility development plans similar to that of Jefferson Community College (i.e. fieldhouse, one or more other secondary components), and in most cases those schools with a two- or three-facility strategy chose a phased development plan. Most of the projects were funded at the 50%-100% level through internal fundraising campaigns comprised of large unsolicited gifts, large solicited gifts, larger, more aggressive smaller-gift campaigns, supplemented by public sector financial participation.

In some instances bonding capability was utilized, but in a number of cases it was the funding capability of the host municipality in exchange for some consideration with respect to providing to the local community facility access and the running of ongoing programs tailored to the specific needs of local community user group subsets. In general, some degree of local community collaboration in the form of project funding, program development and delivery, and debt servicing was not uncommon.

In general, the project development range for many of the completed or contemplated two- or three-component projects was $35 million to $70 million.

Generally speaking, financial performance (especially revenue generation) is not a key or critical project goal or concern at these schools and for these facility operations. Additionally, most of the collegiate projects/facility operations interviewed have athletic and/or physical education department revenue objectives and histories that are either in line with those of JCC, or perhaps somewhat more aggressive.

Health and fitness club memberships made available to local non-campus community members are typically a key program focus of some of the facilities and operators analyzed, and these memberships constitute the main source of revenue generated by new facility projects and operations (especially natatoriums and field houses) that have facility components that readily lend themselves to community and membership-like use.

Highlights of selected on-campus development projects determined to be most comparable to the development strategy and operational intent being proposed by JCC are as follows:

Calvin College: Total project cost of $50 million - $26 million for arena, $12 million for an aquatic center, tennis/track component for $4 million, and $1 million for existing fieldhouse facility renovation. Old field house was converted to intramurals, recreation, and human performance testing use. New arena has 4,500 seats for competitions. Mostly retractable seating (on three sides), all seats have chair backs and arm rests. Facility, in at least its first year of operation, was intended for on-campus events and intercollegiate sports only;

Kenyon College: $70 million project, included football field and outdoor track, new indoor Olympic pool, and a fieldhouse. Fieldhouse is 57,000 square feet, includes indoor track, batting cages. Includes a rec gym (10,000 SF) in lobby, to make immediately available usable space for the campus and community. Lobby space is for rec use only, no access by sports teams. School has 1,600 students, is a 100% residential campus;

University of St. Thomas: Facilities paid for through $60 million donation. Includes a new stretch pool, and a new fieldhouse (at 2,000 seats). Fieldhouse includes 200m, 6-lane indoor track, with an all-purpose infield and a mondo poured track surface. The school is hoping to generate $750,000 annually in revenues from the entire complex through both sports and non-sports activity;

SUNY Brockport State: $39 million total cost, for 145,000 SF. Has 3,850 permanent and temporary bleachers, with a total seating capacity of 5,500 (including floor seating) for commencement. Includes a 200m track with multi-use flooring, a large lobby area that includes a 1,500 SF wood floor for yoga and other health classes, and a 10,000 SF fitness center on the 3rd floor. Infield area on fieldhouse floor is lined for tennis, basketball, and volleyball (intramurals only). Infield can also be used for team sports practices. Floor is a 10mm rubberized surface, that can accommodate track spikes;

Rockland Community College (Eugene Levy Fieldhouse): 90,000 SF facility, built in 1975, is the primary facility for the RCC Physical Education and Athletics Department. The facility has a synthetic athletic surface, and includes four tennis

courts, two volleyball courts, space for three modified soccer fields, a running track, and an Olympic-sized pool. The school charges $3,000 per day for use (includes access to parking lots), and receives 20% of food and beverage sales from concessionaires.

RCC indicates that the fieldhouse is available for a variety of non-athletic event types including concerts and theater productions, trade shows, and conferences.

A scan of the historical RCC fieldhouse schedule indicated that the fieldhouse had booked 14 distinct events, for a total of 35 distinct event dates, over a 12-month period. Event categories scheduled for this recent calendar period are summarized as follows:

- RV show
- Dance competition
- College night
- Pet Expo
- Gymnastics invitational
- High school wrestling tournament
- Auto show
- Home and garden show
- Kennel club dog show
- Fishing and outdoor expo
- Astronomy forum and telescope show
- American Cancer Society Relay for Life

Binghamton University Events Center

Paradigm has participated in multiple walk-throughs of the Binghamton University Events Center, a facility at which Paradigm has prior consulting experience. Eric Backlund and Sue Crane, the facility's former director and assistant director, have over time provided Paradigm with ongoing details on the Center's development, construction, and operating mission, and on annual event planning and booking strategies and efforts.

These walk-throughs and subsequent follow-up interviews have allowed Paradigm to recapture details related to the project's conception, development, and operational evolution, and to thereby reconfirm a primary understanding of the connectedness of facility intent, facility design, space allocation, finish levels, systems and technologies, and overall functionality at the facility.

A summary of key information that has over time been provided by the BU events center staff is provided in bulleted fashion as follows:

Basic buildings facts:

- Total BU Events Center seating capacity (without individual seats on event floor) = 5,142 (full-round configuration);
- Total initial building cost/budget = $33.1 million;
- Total square footage = 180,000 SF (on three floors);
- Floor-to-ceiling height is > 50' from event floor to underside of roof grid;
- Building paid $37,000 for floor covering material (to cover poured permanent mondo-type floor material). Protective material is in large sheets, is rolled on/off and stored in main storage area;
- Track is 6-lane, does have areas for field event competitions;
- Suites were in the original design, were taken out of that design, then suites were retrofitted in to the finished building (based on the athletics department position that they had identified a corporate sponsor audience for same) at a per suite cost of approximately $60,000. Because the suites were an add-on to the finished building, the locations now impinge on the general spectator concourse and have a negative impact on spectator circulation to concessions areas and restrooms that are now behind the suites area;
- BU has put an additional (estimated) $10 million into the facility since its opening (mostly, to upgrade and accommodate uses and event types and operations that were not accurately and/or completely contemplated in the original facility design and business model/operating plan);

Seating:

- Seating is a combination of both fixed/retractable and portable sections. Have retractable bench seating for student area, backs and armrests on seats otherwise. Have some sight-line challenges, as inflexible nature of fixed-retractables makes orientation of seating difficult (towards midcourt and/or center stage);
- When seating is completely pushed in for track use, leaves no spectator seating open and available. Patrons must remain on and view competition from upper concourse. Creates problems for track spectator viewing, as well as operational/management/safety issues when track spectators attempt to utilize top rows of retracted seating sections (i.e. management has to stop track activity, to remove spectators from seats);

Power and systems:

- Building power on the center floor is three (3) 400-amp, and one (1) 200 amp services. At times, has been inadequate for certain events, have had to bring in portable generators for supplemental electrical power;
- Locations of service boxes can be inconvenient (i.e. located at a distance from locations/areas where event set-up actually takes place);
- Center has four (4) separate air handling systems, on the floor area;
- Acoustics inside the center are considered to be very good – contractor used a sprayed-on insulation product instead of a hard product;
- The building does not have enough permanent sound equipment in it –the school pays approximately $3,000 for rental equipment for each event that needs supplemental sound (for an estimated annual sound equipment rental of $12,000);

Event use and functionality:

- Green Day concert was a 9-truck show, required a 6-hour load-in period (due to limited dock access, and lack of functional dock area work space overall);
- Having the basketball floor (portable) located inside the indoor track surface, creates major labor costs (for basketball floor tear-down and set-up when track activity is a priority);
- BU dock area has two-truck capacity, limited space (and low, narrow doorways) for tow motor use for off-loading trucks. Interior of dock area is at base of long exterior driveway slope – lack of drains in dock area has caused serious flooding from rain and snow;
- Building has only one elevator, is used for combination of spectators, building administration, and downstairs food service commissary. Mixed use during events can cause significant tie-ups during high-activity times;
- Fitness area is approximately 2,200 SF. Flooring is original, equipment is original, both deemed to be in good shape and good FF&E choices;
- Building has auxiliary storage space outside of but proximate to building (for chairs, tables, other equipment that does not require climate control);
- Original design made simple mistakes in lower locker room and workout area – had to retrofit new drinking fountains in hallway, at significant cost;
- Lobby area (and box office/ticketing space) is not big enough for full-house capacity, especially during bad weather. At Events Center, rotunda/ticketing area looks nice, but as the only point of building entry, ticketing lines can get co-mingled with entering patrons and can become very congested;
- Security requirements example – for Green Day concert, had 18 security (plus 2 deputy chiefs) – traffic, indoor patrol, outdoor patrol;

Concessions:

- Concession area locations are not optimal for use during full-house events, especially for events with intermissions and half-times. "Grand stair" location funnels spectator traffic to few and limited-space areas, causing congestion generally and queuing problems for food service at concessions stands;
- Concessions/merchandising areas:
  - Center has three (3) fixed locations (with four points of sale each);
  - Facility only sells beer and alcohol at the Bearcat Den (private meeting/entertainment space);
  - At portable cart locations (for merchandising) on concourse area, staff recommends both power and card-swiping capabilities be available;
  - BU recommendation – "need to have selling space on the concourse, and need to identify in advance where those locations are going to be";

Ticketing and administration:

- Ticketing/box office set-up:
  - 6 box office windows (for sales, and will call);
  - Located inside main entrance (rotunda);
- Administration space:
  - Recommendation is that general manager space needs to be near elevator(s), and box office;
  - Space needs to be near the main entrance, and visible;
- Regarding ticketing system, choice needs to be based on what the facility's expected average ticket price is going to be (because the more expensive systems require the application of bigger additional fees, which can significantly escalate the total face value cost of a ticket);

Other:

- Center includes parking charge in the ticket price, but only for adult/non-student tickets;
- Does have a "facility fee" included in ticket price for non-BU events ($1 per student, $2 per non-student);

To complement information generated by the BU Events Center walk-through, Paradigm regularly refers to the *BU Events Center Promoters Guide*, available at the facility website, which provides a comprehensive summary of the technical and non-technical specifications of the BU Events Center that are key areas of

information necessary for users of the facility representing a variety of event types.

This promoter's guide, when combined with first-person walk-throughs conducted at the facility, can provide a campus facility project team with a complete understanding of a start-to-finish project that may be closely comparable in some ways to the development, construction, and operational intent of one or more components of the proposed Jefferson Community College new facilities development strategy.

Information areas addressed in the *BU Events Center Promoters Guide* are as follows:

1. Size of House (dimensions, seating capacity, type, locations);
2. Stage Description and Dimensions;
3. Grid and Rigging;
4. House Curtains;
5. Masking;
6. Loading Dock;
7. Lighting and Power;
8. Communication;
9. Sound Equipment;
10. Other Equipment;
11. Rooms;
12. Building use (booking control, event booking criteria, event booking hierarchy, confirming and contracting, date protection, date challenges, deposits, cancellations, facility use application, rental, payment, and billing).

Additionally, from the above listing of comparable projects, original preliminary/conceptual information on the new SRC Arena project at Onondaga Community College will be illustrative to JCC for comparative purposes.

Although the facility has been named SRC Arena by the school, the facility fits the "enhanced fieldhouse facility" description that has been developed earlier. At the time of its strategic inception, OCC was proposing an "events center" project that was to include an eight-lane 200-meter indoor track in a bi-level arena/fieldhouse facility that was expected to have a fixed/retractable seating capacity of 5,000 (plus seating for an additional 2,000 on the event floor), approximately 60,000 SF of interior space, and with a building operation intended to elevate outside ticketed event use and revenue generation as a priority within the overall annual event schedule.

The OCC events center project had a fixed hard and soft project cost of $26 million (which included both the new building and renovation of an existing adjacent structure). The selected project team was given a "build to budget" imperative by the college, as funding for the project had been provided for the school by the state.

OCC was intending to hire a building manager who had experience within the public assembly facility and trade show/ticketed entertainment industry. An enhanced food service operation was originally considered for the facility, which would necessitate specialized spaces, equipment, and staffing capability. A decision on self-operating the concessions/catering function or contracting out to a food service vendor for such services was dependent on the final event booking strategy and business volume that was calculated for the facility.

Since the opening of SRC Arena in Q4 of 2011, it has been indicated that the facility had adjusted its original strategic programming intent somewhat, which was to be an aggressive ticketed entertainment venue within the CNY facility market, competing on a head-up basis with other existing venues in Onondaga County (esp. Oncenter complex).

The facility has been managed since prior to opening by an experienced public assembly facility professional who is an employee of the college; the current understanding is that the facility has had in its first full year of operation a more moderate outside ticketed event schedule than that which was previously targeted.

Since the OCC facility opened, SMG, one of the industry's largest public assembly facility management companies, has been contracted by Onondaga County to manage the Oncenter facility complex, which includes convention center space, the war memorial arena component (7,000 seats), and the performing arts theater space (2,100 seats). The involvement of SMG in the regional CNY facilities market undoubtedly has injected a new competitive element to the SRC Arena strategic programming and marketing plan, one which the OCC facility will need to critically assess and effectively react to over time.

Technical Requirements and Show Riders

Assuming that an "enhanced" or "hybrid" fieldhouse project is accepted and focused on by JCC, planning work for this new "events center" concept will need to merge certain design elements that are typically found separately in traditional fieldhouse and multi-purpose arena facilities.

Following the Onondaga Community College SRC Arena design strategy (and perhaps certain aspects of the Binghamton University design and operation), and

some of the non-NYS project designs that have been funded and in some cases successfully completed in the inventory of comparable facility projects assessed for this JCC study, it is possible to generate a preliminary understanding of the design philosophy, criteria, and elements that would need to be integrated and incorporated into a JCC "enhanced fieldhouse" or events center facility that would fulfill event-type, patron, and service goals that have been preliminarily targeted by the school.

Design team specialists are uniquely suited to create the architectural design program and construction cost estimations for the intended JCC facility. However, technical information related to targeted event needs can be conveyed to the design and planning team at the design effort's outset, so that the specialized technical requirements of targeted event types are both considered at the outset of the planning stage, and analyzed from a cost-benefit perspective as they relate to impacts on the proposed project budget.

In that effort, Paradigm has been able to accumulate specific technical information from targeted event categories and specific events that an eventual design team can then translate into iterations of a proposed facility design program for an "enhanced fieldhouse" or "hybrid" events center facility.

This information was assumed to allow an eventual JCC decision-making team to assess the cost-benefit of including certain design and functional capabilities into the building so as to accommodate, on a targeted and prioritized basis, the specific technical needs of targeted campus and outside event categories and specific events.

Outside event and program technical riders are unique internal documents that typically include detailed show requirements in the following and other areas:

- Rigging requirements (loads, hanging points);
- Show power requirements;
- Stage size, location, and set-up;
- Show lighting requirements (type, location);
- Back-of-house requirements (loading dock access, parking, courtesy facilities for road and stage crews).

Technical riders have been obtained over time by Paradigm from a variety of touring show representatives, as well as from other facilities such as the Binghamton University Events Center. A summary of descriptions of technical

riders obtained by Paradigm and available to JCC and its representatives for possible analysis and integration into a JCC design/construction team work effort is provided in Table One.

Table One – Available Technical Rider Summary

Name	Type	Source
Creative Artists Agency	Live music technical rider	Binghamton U. Events Center
Generic rider – large band	Live music technical rider	Binghamton U. Events Center
Harlem Globetrotters Technical Rider 2008-2009 Tour	Basketball show tech rider	Harlem Globetrotters
Ringling Bros. Anchor Bolt Diagram	Diagram for fabricating floor/bolt connections	Feld Entertainment
Ringling Bros. Barnum-Bailey Blue Unit Rigging Plot	Rigging diagram and floor layout	Feld Entertainment
Ringling Bros. Insert Modification	Floor insert layout diagram	Feld Entertainment
2009-2010 Technical Rider – Elmo & Friends (Vee Corp.)	Family show technical rider	Vee Corporation

Sources: Various touring entertainment show representatives, comparable facility management

For purposes of project team education and discussion, a program matrix can be developed that standardizes presentation of building design/functional requirements by targeted event type.

While not represented in the above table, large-scale flat show and trade show requirements can be articulated based more on anecdotal information provided by show representatives than by technical rider-type materials.

A summary of trade show requirements for indoor clear-span facilities is as follows:

- Show power – In consideration of having a pristine and permanent floor, the facility needs to have for trade show use 100amp drops from the ceiling at 20'-40' intervals (20' preferred), to provide AC power to the booths. Dropped lines can then be run to individual booths without cluttering circulation paths on the floor. Phone lines and credit card swipe lines need to be handled similarly;

- Catwalks in the ceiling grid system can help with ease of set-up and trouble-shooting;

- Computer access – The same accommodation from the grid needs to be made for computers that would be set up at individual booths. Service of some type – DSL, wireless, other – needs to be provided;

- On the outside of the building, 220 and 110 hook-ups need to be provided near the loading dock area, for access by buses and some service vehicles;

- 3 docks are adequate, as long as runs are straight in to the building. Self-leveling docks are more expensive but preferred if affordable, so that manual leveling of individual truck trailers can be avoided;

- Adequate outside commercial lighting is needed at the dock area, to facilitate after-sundown and early morning loading and unloading;

- For trade shows, it is important to not make too much AC available on the interior walls of the facility, as vendors will steal outlets for their own use (and thereby avoid paying for service if they had to utilize regulated access in the building). Any outlets on the walls should be clustered at areas that have been identified as food service areas (for buffet food and similar);

- Any double doors in the load in-out area need to be able to have their center-post hardware disassembled, in the event that an oversized doorway is needed (for ingress/egress of vehicles and similar);

- For the size of facility contemplated, the building may ultimately want to purchase its own pipe, drape, chairs, and tables, if estimated and actual trade show/floor event volume eventually warrants. Equipment might reach 600-700 tables, and chairs and pipe and drape for 350+ 10'x10' booths. The building will need storage space for these;

- Event space water and drainage – A poured, permanent event floor surface will preclude these. Vendor access to water and drainage at booths is infrequent, and can be accommodated somehow if water pipes/taps are available at a few interior wall locations; and

- Anticipated ceiling loads of 100,000+ lbs. might be contemplated for some specialized public events.

While symphonic events have not been specifically contemplated by this JCC study, the technical requirements of high-end cultural events, including symphonic, should be understood at a basic level in the event that there may exist an opportunity to secure cultural programming that cannot be otherwise accommodated by the Jefferson County market and facility inventory.

Therefore, anecdotal information gathered from other interviews conducted by Paradigm with symphony orchestra representatives and which provides direction with respect to high-end music and cultural events technical needs can be offered as follows:

- Symphonies and higher-end cultural events typically use facilities that are hard-wired (for microphones and other), but wireless capability is considered an operational benefit;

- Adjustable shell and ceiling panels are typically necessary, to create an actual shell structure on the stage;

- The available sound system needs to provide a wide array of speakers (for amplified shows), as well as acoustically-sensitive materials throughout the space;

- Curtaining, if used to either trim or scale the house, tends to absorb sound, which has a negative impact on reverberation. Folding wall panels are considered to be better for symphonic music use than are curtaining systems;

- Show power needs are typically not extreme, and symphonies can usually conform to and utilize whatever service capability is available;

- Some symphonic shows with guest artists do want to hang lights off of trusses located out over the audience; and

- At a symphony orchestra size of 65 or greater, the facility would need to accommodate at minimum a 40'x 60' stage, and would need additional wing capacity on both sides of another 15'-20'.

Site Visits – NYS Cohort Schools

On behalf of the JCC project, Paradigm conducted site visits at and primary research on five of the NYS public college-university facilities that can be considered to comprise the primary cohort of completed public school facility projects that JCC is utilizing as a reference point. These site visits were conducted in most cases with some combination of JCC athletics department and/or administration representatives.

A summary of key comparative characteristics of these five facilities is provided below in Table Two.

Table Two – NYS Public College-University Cohort

School	Project Cost	Facility Type	Facility Components	Primary Intent	Management Model	Revenue Focus?	Outside Event Focus?	Comments
Binghamton U.	$30+ million	Enhanced Fieldhouse, "events center"	Fieldhouse	Athletics	In-house (non-athletics)	Limited or none	Limited or none	20+ athletics programs to serve. Has been lack of clarity since opening as to whom facility is primarily responsible to (athletics, or administration)
SUNY Canton	$45 million	Traditional fieldhouse, w/ ice rink	Fieldhouse, single-sheet ice rink	Athletics, rec and intramurals, local community	In-house (non-athletics)	Limited or none	Limited or none	Permanent basketball floor and limited seating capacity limits outside event opportunities. Charge $95/hr. for ice time. Rink gets some rental use, but is limited due to high hockey and other campus program use.
SUNY IT	$25 million	Traditional fieldhouse	Fieldhouse	Athletics, rec and intramurals, other campus events	Campus (non-athletics)	Limited or none	Limited or none	Replaced existing gymnasium. Is part of bigger athletics complex project (outdoor turf field and track). Had $800,000 technology package installed, to enhance commencement and graduation production.
Mohawk Valley		Traditional fieldhouse	Fieldhouse	Athletics, rec and intramurals	In-house (non-athletics)	Limited or none	Limited or none	Very straightforward facility. Limited seating capacity. Lack of proximate parking limits outside event capability that includes spectators.
OCC	$25+ million	Enhanced Fieldhouse, "events center"	Fieldhouse	Multi-purpose venue	Public assembly facility professional (in-house)	Primary objective	Primary objective	Athletics was minimal consideration re: design, management, business model. To extent possible, multi-purpose use was designed into the building.

Source: Consultant site visits, interviews, support research

B. *Indoor Skating Facility Industry – Existing Conditions Analysis*

An analysis of other regional, New York State, and geographically proximate contemporary indoor skating facility operations provided a context against which the overall operation of, strategic intent for, and financial performance of a proposed JCC indoor skating facility project component could be critically compared.

The intent of the existing conditions analysis was to determine design, development, operational, marketing, and programmatic characteristics and trends represented by a cohort of "like" indoor single- and multiple-sheet skating venues, so that a reasonable context for JCC could be developed against which market demand, project financing, facility management and operations, and marketability benchmarks, challenges, issues, and opportunities could be identified and then impressed against City of Watertown and Jefferson County market conditions.

Key and Representative Local, Regional, and Other NYS Facilities

Among other broader analyses that were conducted in this effort, a subset of local, regional, New York State and other comparable facilities were identified and analyzed for this purpose. By geographic locale, some of these facilities are identified and summarized as follows:

- **Northtowns Center at Amherst**: 4-sheet skating complex, owned and operated by the Town of Amherst. Opened in 1999-2000. Major tenants are youth hockey and figure skating, facility is reported to have little ice time available for outside (i.e. "non-resident program") user groups. Has hosted national hockey and figure skating competitions. Originally had private operator (Delaware North Companies), now successfully run by town rec department. Financial performance questions and concerns have been a key issue since opening, although reports indicate that facility was able to break even on operations (absent debt service responsibility) for first time in 2011. Facility routinely books 3,500+ hours of ice time *per sheet* on an annual basis, at $175+ per hour for prime time ice. Key user is Amherst Youth Hockey Association, one of largest youth hockey membership organizations in the U.S. (typically top three-five in membership, per USA Hockey);

- **BIG Arena**: 2-sheet operation in Delmar, NY. Was originally privately owned and operated, was practice facility for Albany River Rats minor league hockey team. Brought in private management company to help address financial performance difficulties in later years, facility was abandoned by private owner-operator, has been taken over by local YMCA;

- **Cicero Twin Rinks**: 2-sheet complex in Cicero, NY (rural location, outside of Syracuse). Opened in 2000, was intended to be the indoor recreational component of a major 250+ acre public-private commercial/medical/residential development project. Private development never materialized, Town of Cicero bonds went into default early on, rink's expected operating subsidy was dependent on projected cash flow from private development. Most recent private ownership group has been in discussion with local non-profit skating organization to sell property and business operation;

- **The Community Center (Ithaca, NY):** Single ice sheet and two indoor turf field complex, owned/operated as private non-profit. Started as ice rink, added turf fields thereafter. Prime ice time selling for $165+/hour. Lean operation in modestly-priced facility, exhibits satisfactory financial performance and program growth year-in and year-out;

- **The Sports Centre**: 4-sheet skating complex on Monroe Community College campus outside of Rochester, NY. Reportedly built for $13 million+, was public-private partnership with Rochester Americans AHL hockey franchise. Monroe County IDA bonds defaulted in year 2-3 of operation, outside private management was brought in to stimulate special skating event (i.e. hockey tournament) activity in particular. Facility has continued to have annual financial problems, MCC has reportedly not received ground rent payments from facility in the amount of $500,000+. New outside management company has been brought in since start of 2012, facility is now charging $290+/hour for prime time ice, reportedly continues to be unable to pay operating expenses in timely manner;

  Lysander Rink: Municipal rink outside of Syracuse, NY. Poor financial performance exhibited for entire 10-12 years of operation. Facility was closed under municipal ownership/management model, has reportedly been gifted to the local YMCA for ownership and operation;

- **JM McDonald Sports Complex**: 501 (C)(3) private non-profit skating/turf field complex located in Cortland, NY. Total cost to build was $3.7 million.

In ninth year of operation. Located at Cortland County Fairgrounds. Spartan facility and operation, reported to be having financial performance challenges since its inception. Reportedly attempts to run with significant volunteer staff component.

In addition to newer-generation New York State skating rink and rink-turf field complexes that were referenced above, older-generation indoor skating complexes which were identified and for which recent ice rental rates were confirmed included the following:

- **Dwyer Ice Arena (Niagara University, Lewiston):** Two ice sheets, home to Niagara University men's and women's Division I hockey programs;

- **Frank L. Messa Rink (Union College, Schenectady):** Single-sheet domed facility, home to Union College men's and women's Division I hockey programs;

- **Hockey Outlet (Pendleton, NY):** Formerly Sabreland, now privately owned and operated single-sheet facility;

- **Holiday Twin/Leisure Rinks (Cheektowaga, West Seneca):** Privately owned and operated, two of WNY area's most active ice hockey complexes. Old facilities, limited amenities, ice sheets built on sand as opposed to concrete slab;

- **Onondaga Nation Arena (Nedrow, NY):** Built for skating and Native American box lacrosse, owned and operated by Onondaga Nation on sovereign land south of Syracuse.

To summarize the operation of the seven newer-generation NYS facilities, five have experienced significant financial performance challenges since their respective openings, to the extent that four of these complexes have undergone major operational and financial trauma as follows:

- **BIG Arena** – one sheet converted to turf, was sold to and is now operated by regional Albany YMCA:

- **Cicero** – attached YMCA tenant has vacated space, facility has been sold to multiple outside ownership groups. No private investment/development on geographic footprint has materialized since rink complex and YMCA were opened;

- **The Sports Centre**: Off-season utilization expectations never materialized, retail operations reportedly have never made money. Ice rates have reportedly been raised more than $110/hour since opening for prime time ice, to $290+/hour; and

- **Lysander** – was sold/gifted to local YMCA.

By comparison, the subset of older New York State ice rink complexes exhibit a variety of operational intentions and performance expectations that are somewhat unique when compared to newer, larger, and/or privately owned and operated single- of multi-sheet skating facilities.

Municipally-owned rinks have relatively low ice rental rates, typically are not open for the April-September off season, and have operating budgets that are absorbed into general operating or recreation department budgets. Residents/tax payers gain access to a dated facility at a low cost, but receive few if any services or amenities in a facility that typically is challenged to maintain itself.

College- and university-owned skating facilities (Niagara University, Union College, SUNY Canton) typically make their intercollegiate athletics programs the scheduling priority during the fall-winter skating season. Outside ice rentals are common, but non-campus users are typically slotted around the school's practice and home game schedules.

Privately-owned and operated facilities in Western New York are an anomaly within the NYS comparables cohort. Facilities such as the Hockey Outlet, Holiday Twin Rinks, and Leisure Rinks typically have limited cash flow available for facility upgrades and improvements, and often are substantially the same facility (i.e. spartan inside and out, no infrastructure investments) that they were when first built. That said, in a Buffalo area market that is "NHL"-centric where they choose to focus primarily if not almost exclusively on the youth and adult hockey market, they have some of the most active buildings in the area and are able to charge some of the area's as well as the state's highest per hour prime time rental rates.

Facilities that cater to or have significant figure skating components often share similar strategies and tactics that govern their relationships with the figure skating clubs that they provide ice time to. However, the degree that financial performance of the facility drives the facility's overarching management and operational philosophy often influences the nature of rates, agreements, revenue streams, and scheduling priorities between the facility and the skating program.

Indoor Skating Facility Industry Characteristics

As evidenced by evaluation of *contemporary indoor ice rink complex operations* in New York State, indoor skating facilities are being challenged to achieve adequate financial performance (i.e. financial breakeven either before or after debt service).

Those facilities that cannot achieve necessary financial performance, are being converted and/or sold (BIG, Cicero, Lysander), have had their bonds go into default (Cicero, The Sports Centre), or have been under close public and media scrutiny in the areas of management, operations, and programming (Northtowns Center at Center). These financial performance challenges encompass private, public private partnership, and public facility ownership-operating models.

To a large extent and in retrospect, the financial performance challenges faced by newer facilities seem to be a result of faulty planning. Unrealistic expectations regarding annual program use, the operational capability of the owner, and the ability to generate ancillary and off-season revenue, combined with too significant of an initial capital investment (i.e. too many sheets of ice, too much non-revenue producing space, too high a level of inside and outside finishes, too much paid on a per square foot basis overall to develop the facility) seems to have significantly hamstrung many if not most owners-operators of newer New York State indoor ice skating facilities.

Generally speaking, a number of factors are impacting nation-wide the ability of indoor skating complexes to sell ice time, market effectively, generate revenues, and achieve satisfactory financial performance. A summary of trends, considerations, and issues was highlighted in an October, 2006 article in the recreation industry trade publication *Athletic Business*, titled "Skate of the Union". Many, if not most, of these comments still hold true in the 2012 indoor skating market. Key comments from the article are articulated as follows:

- The NHL lockout of 2004-2005 undoubtedly had some negative impact on USA Hockey youth hockey registrations and participation, and the 2012-2013 lockout will undoubtedly impact youth hockey registrations going forward;

- David Ogrean (Executive Director, USA Hockey) indicated that markets with NHL teams in a region tend to experience growth currently, but that national youth hockey program figures were undergoing "a modest but temporary erosion" of 1-2%;

- One obstacle to participation is cost of equipment and ice time, and this most likely limits youth hockey participation in some of the U.S.'s smaller and economically-weaker geographic/demographic markets;

- International Hockey Industry Association's "OneGoal" program was seeking to generate cooperation by equipment manufacturers in developing equipment lines and packages that were affordable for entry-level skaters, so as to not price participants at the lower levels of the "participant pyramid" out of the skating market;

- USA Hockey surveys of its youth hockey and figure skating members indicated that its 600,000 members are "pretty upscale", which is why increases in ice time in many *larger* U.S. markets has not had a major impact on participation levels;

- It is believed that the operation of public rinks, which typically do not have pressure to achieve financial break-even, helps to maintain hockey and figure skating membership numbers when other negative (marketing and financial) impacts occur that are outside the rinks' control;

- "There is a certain degree to which we are held hostage by the cost of energy" (Ogrean);

- Florida and Texas have led new rink development since the 1990s, but construction in most other U.S. markets has slowed, even as demand for ice time has continued to grow;

- The STAR (Serving the American Rinks) program believes that skating programs generally are better at marketing themselves than are the rink operators at whose facilities they skate;

- Rinks are challenged by, but need to be charged with, being more creative and aggressive in generating foot traffic at their facilities (Pat Kelleher, USA Hockey, COO for STAR).

Implicit in the challenges faced by comparable NYS rinks identified in this JCC study are many of the trends and issues articulated above from the *Athletic Business* article.

As has been determined in NYS, *rises in utility costs over the past 5-8 years* have had significant negative impacts on building finances and operations, and in some cases those impacts have been extreme. As an example, for the 2005-2007 skating seasons in the Utica-Rome area of NYS, public skating complexes

in New Hartford, Clinton, Whitestown and elsewhere were forced to either contemplate or execute shut-down measures for the 2006 summer, due to an inability to offset rising utility costs through earned revenue generation. Monthly energy bills of $12,000, $15,000, or $20,000 for single-sheet indoor skating venues prompted this discussion in the Utica-Rome area, and in some cases the implementation of such emergency strategies was carried out.

Additionally, the "upscale" nature of figure skating and ice hockey participation has limited the ability of certain New York State markets to consider the development and operation of new indoor skating facilities. Municipal leaders as well as volunteer committees in markets as diverse as Rome, Wellsville, Clarence, Lockport, West Seneca, and Dunkirk-Fredonia have evaluated over the past 8-12 years opportunities to invest in and operate facilities either exclusive to skating or with a significant skating component – to date, projects in these markets have not moved forward at all or to a significant degree, and this lack of movement is related in no small part to (1) an inability of the markets to exhibit enough projected program participation, and/or (2) an inability of the market to raise user rates to a level that allows the facility to receive enough revenue from ice time rentals so as to make likely the satisfactory financial performance of the proposed facility.

With respect to the utility/energy cost issue specifically, within NYS and nationwide, the rise in utility costs primarily has caused both municipal and privately-owned rink complexes to offset this particular expense item increase by raising prime and non-prime rental rates for their internal and external user groups.

In Western New York and Northwest Pennsylvania, for instance, ice rental rates have increased significantly since the opening of the Jamestown Savings Bank Ice Arena in 2002, to no small degree as a result of increases in local energy costs.

To test for the JCC project the variability of ice rental rates in a variety of NYS markets, Paradigm conducted a "secret shopper" phone interview process to determine current rental rates for a sampling of indoor skating facilities within the study's comparable skating facilities cohort.

A summary of JCC's comparable market/facility prime and non-prime ice rates is presented below in Table Three.

Table Three – Ice Complex Rates (per hr.)

Facility (Market)	Prime	Non-Prime
Northtowns Center at Amherst	$195	$125
Cicero Twin Rink	$175	Case-by-case
Dwyer Ice Arena (Lewiston)	$160	$105
The Sports Centre (Rochester)	$295	$230
Frank Messa Rink (Schenectady)	$165	$165
Hockey Outlet (Pendleton)	$200	$90
Holiday Twin/Leisure Rinks (West Seneca)	$200	$100-$175
JM McDonald Sports Complex (Cortland)	$135	$110
JMC Ice Arena (Erie)	$160	$150
Meadville (PA) Area Rec Complex	$160	$80
Olean Rec Center	$110	$95
Onondaga Nation Arena (Nedrow-Syracuse)	$100	$100
Watertown Ice Arena	$70	Negotiable

Source: Consultant research

Newer rinks represented in this table (Northtowns Center at Amherst, Cicero Twin Rinks, The Sports Centre, JM McDonald Sports Complex) show an average prime rate of $200 on average for a 50-minute hour. Older rinks show an average rate of $157 per 50-minute prime time hour.

However, three older, privately-owned rinks – Hockey Outlet, Holiday Twin Rinks, Leisure Rinks – have an average prime time rental rate of $200 per hour, despite the fact that compared to both newer regional rinks and in some cases older municipal rinks in the area, these private facilities are not contemporary from a location, design, systems, amenities, and services level standpoint.

The "affordability" issue was prominently highlighted by the *Athletic Business* skating market article. As affordability seems to have been a key issue at many of the comparable NYS venue evaluated, and as this is a real issue in Watertown and Jefferson County as well, some assessment of relative NYS market affordability was conducted for this study.

Table Four below provides a comparison of per capita personal income (dollars) in NYS counties represented by the comparable NYS facilities that have been identified.

Table Four – NYS County Per Capita Income Comparison

County	Per Capita Income	County Rank Within Cohort
Albany	31,728	1
Broome	24,766	8
Chautauqua	21,325	11
Chemung	24,299	9
Erie	27,366	5
Jefferson	***22,574***	***10***
Monroe	27,712	4
Niagara	25,046	7
Onondaga	27,960	3
Schenectady	28,001	2
Tompkins	26,199	6

Source: U.S. Census Bureau 2007-2011

Table Four indicates that out of the 11 NYS counties listed, Jefferson County ranks 10th in per capita income at $22,574. Relating this to cost to rent ice time, in Jefferson County (ranked 10th), ice time at the city ice arena currently rents for $70/hr. (for student and youth groups), which is 1/3rd of the ice time rate at the Community Recreation Center in Ithaca (Tompkins County, ranked 6th), ½ of the rate at Jamestown Savings Bank Ice Arena (Chautauqua County, ranked 11th), and 1/4th of the ice time rate at The Sports Centre in Monroe County (ranked 12th).

However, indoor skating facility projects are in fact getting funded and developed in NYS, although within and by an in-place institutional system with clear funding, design, and planning processes and mechanisms. Within the SUNY system, two rec/skating complexes have been completed in the last seven-year period. At SUNY Oswego, a new Campus Center opened in October of 2006 that includes a new 3,000-seat indoor ice skating facility for its Division III men's and women's ice hockey teams.

SUNY Canton has also completed its new facility, which serves as the new home for the SUNY Canton men's ice hockey program. The impetus for the project was the gradual degradation of the municipal hockey facility in Canton where the SUNY men's program historically practiced and played its home hockey games. The project also included a new fieldhouse component for use by the school's court sports programs, as well as for rec and intramurals.

At SUNY IT, a planned ice rink project was determined to be unfeasible based on a critical and comprehensive regional skating market demand analysis; as a result, $25 million in state project funding was applied instead to a new fieldhouse for the intercollegiate athletics department.

With respect to other types of prevalent indoor recreation projects, indoor soccer (turf field) development projects have become more prevalent since 2000, and much more so than indoor ice skating projects. Indoor turf field complex costs to build and operate are significantly less than are those of indoor skating facilities. As a result, private owner-operators are investing in these capital projects and operations. In particular, the Syracuse, Rochester, and WNY markets have seen a number of such multi-turf complexes built and opened in the last 10-12 years.

While the operating history for these newer turf facilities is limited due to their relative lack of extended operating history, it has been indicated that these non-ice facilities seem to have less financial difficulty and more programmatic stability and opportunity than do the NYS skating complexes that are of a similar generation.

C. *Indoor All-Weather Surface Turf Field Facility Industry – Existing Conditions Analysis*

In NYS, a recent evaluation of indoor community and/or regional recreation facility projects indicates that in many cases, positioning projects to move beyond the conceptual stage has been problematic.

For the most part, an inability to move recreation facility projects forward has resulted from first, an inability to project acceptable financial performance for the facility and second, an inability to create the funding capability to afford the capital expense involved in a seven-figure development project (i.e. hard construction costs, land acquisition, soft costs, FF&E, etc.). Obviously, an inability of a proposed project to address the financial performance issue will impede the opportunity to seek public, private, or institutional support for funding.

Within the past 5-7 years, the JM McDonald Center in Cortland has been one of the few new indoor facility in Western or Central New York that has had success in getting funded, built, and opened. However, this particular project benefited from a seven-figure grant as well as from a significant USDA "Small Cities" program-backed bank loan. That said, the facility has only been opened for seven-plus years now, and its ability to meet its ongoing financial obligations through it operations still remains an open question.

Unlike the Cortland project, proposed projects in Binghamton (Vestal), Dunkirk-Fredonia, Rome, Clarence, Lockport, Watertown (town), and Wellsville have had difficulty gaining some combination of financial, political, and/or community traction.

Summaries of plans for and the status of each are provided as follows:

- **Binghamton**: 501-(C)(3) group has been attempting for seven-plus years to develop and operate soccer-primary indoor facility. Received grant money from (then) Sens. Clinton and Schumer, but have not been able to put deal parts together for new construction. Have purchased a local facility and adapted it for indoor soccer use, as an interim step. In the interim, a new indoor inflatable dome of some significant size has been constructed in the market, and is hosting indoor turf field sports and activities;

- **Dunkirk-Fredonia**: Volunteer committee received its 501-(C)(3) private non-profit designation seven-plus years ago, after 2+ years of submissions and denials, and would consider developing and operating an indoor turf field-ice hockey complex. A full market analysis indicated a

very thin local program base for hockey in particular, limited ability of skating programs to pay required ice rental rates, and limited political and corporate support for the project within the market;

- **Rome**: City had proposed to build an indoor ice hockey-turf field complex on designated brownfield site near Erie Canal. Development project was estimated to be in $8-12 million range. Demand study showed significant interest by soccer community, but limited projected incremental activity by local youth hockey program. Ice rink fees were also a sensitive issue with projected user groups. Supposed lack of political support beyond the Mayor's office caused the City to revert to spending $1-2 million in an attempt to rehab the existing and old Kennedy Arena single-sheet skating facility in City;

- **Watertown**: Town of Watertown was a proponent 10+ years ago for a new ice rink/arena/exhibit hall type of complex for the Jefferson County market. High construction costs and limited projected financial impact from skating programs caused the concept to be tabled. Town then revisited the opportunity 7+ years later, but absent the ice skating rink component;

- **Wellsville**: Local volunteer committee was advocating a new indoor recreation complex for the market. Had asked for architectural drawings from targeted architecture/engineering firms, in advance of quantifying program demand for and economics of capital investment and operation. Limited ability of volunteer committee to coordinate programs, political considerations, and funding needs and capabilities caused the concept to be abandoned.

Current Regional Indoor Turf Field Inventory

City of Watertown and Jefferson County indoor skating, soccer, lacrosse, and field hockey participants are relegated to using older and relatively outdated facilities located in the City and elsewhere through the county, particularly for youth hockey, rec soccer, and travel soccer. For indoor skating sports, facilities in Clayton, Canton, and Alex Bay, among others, are accessed for incremental skating use beyond the ice time capacity of the fairgrounds-located single-sheet ice arena.

Travel and academy soccer programs based in the North Country are forced to travel to Buffalo, Rochester, Syracuse, and Albany to supplement their own training and competitive indoor soccer programs and play when the cannot gain access to the YMCA facility at the fairgrounds location. These non-local indoor turf facilities are in some cases either limited from a functional standpoint as converted facilities, or they are relatively new and designed specifically for soccer and other field sports use.

Site visits were conducted by Paradigm at a selection of the CNY indoor facilities that are regularly frequented by Watertown area users and teams. An alpha inventory of facilities at which site visits were conducted for purposes of this analysis is as follows:

Indoor turf field facilities:

- CNY Family Sports Center (Baldwinsville);
- Field of Dreams Sports Complex (Utica);
- SportsCenter 481 (Syracuse);
- Sportsplex (Utica);
- Syracuse Indoor Soccer Center (Liverpool);
- The Community Recreation Center (Lansing);

New development projects:

- JM McDonald Sports Complex (Cortland)

A basic description of these individual turf field facility characteristics is provided in Table Five.

Table Five
Regional Indoor Turf Field Complex Characteristics

Facility	Location	Distance from Watertown (mi.)	# Turf Surfaces	Year Opened/ Added
CNY Family Sports Centre	Baldwinsville	71	2	Unknown
Field of Dreams Sports Complex	Utica	82	1	2003
SportsCenter 481	Syracuse	70	3	2001
Sportsplex	Utica	82	1	Unknown
Syracuse Indoor Sports Center	Liverpool	69	2	1984
The Community Recreation Center	Ithaca	124	2	2001
Ultimate Goal Family Sports Center	Marcellus	84	2	Unknown

Source: Consultant research, Mapquest

In addition, an attempt was made to aggregate visual, anecdotal, and technical information on each of the facilities evaluated, so as to determine future JCC strategies for respective investment and operations, as well as to identify competitive and market characteristics that a new JCC facility will need to either adhere to or reference in the development of its own key development, location, management, marketing, programming, and financial assumptions. Indicated fees may be approximations based on previous management interviews and secondary data scans.

This assessment information is represented below in Table Six (turf field facilities).

Table Six
CNY Regional Indoor Turf Field Assessments

Indoor Turf Field Facilities	Location	Site Visit Observations, Logistical-Operational Characteristics, User and Other Comments,
CNY Family Sports Centre	Baldwinsville	• Approximately 1 mile from Rte. 690 exit; • Fairly rural location, road does not seem to be main thoroughfare; • Rumored (by other regional facility owner) to be for sale; • Butler building, with enhanced façade; • 2 indoor fields, both with Astroplay surfaces; • Has extensive fitness center upstairs (overlooks fields); • Retail areas include snack bar and ice cream stand; • In addition to main facility entrance, have separate entrances in front for Cool Down retail and Syracuse Pro Soccer (administrative offices for team?); • Paved parking for 150+ vehicles; • Multiple outdoor fields, with electronic scoreboards; • Lots of sponsor signage inside; • Snack shop has ice cream parlor design/feel to it; • Upstairs fitness area has a picnic-like bench area, overlooking fields; • Exterior has lots of landscaping, and picnic tables in front of building;

		• Arcade game area estimated at 250 SF, with 12-14 games; • Snack area estimated at 400 SF for seating, 250-300 SF for service and prep; • Are vending machines (ATM, gumball, toys, canned/bottled beverages, other) scattered around inside of facility; • **Program fees**: **Summer lacrosse** = $695 per team (8 games, plus tournament); **Indoor soccer** = $950/team youth (10 games plus playoff), $850/team adult (8 games plus playoff); **Indoor lacrosse** = $950/team for 9-week session
Field of Dreams Sports Complex	Utica	• In The Champlin Commons strip mall just north of Utica College, location is former warehouse space; • Located 1.3 miles from Sportsplex facility; • No street sign – very hard to know facility is there, from the street; • Privately owned by local baseball guys; • Primarily baseball center, lacrosse/soccer field was afterthought; • Interior was built by owners; • Turf field has boards, is not regulation at all (boards too high, ceiling too low, field too narrow); • Owners intend to buy or build own building at some point and relocate; • Indoor signage/sponsors include Play It Again Sam Sports, Don's Superstore (Ford dealership), Adirondack bank, 2 local radio stations; • Plentiful paved parking; • Food service area is small with limited selection, retail area is mostly baseball; • **Rates**: $125/hour for boarded field, $100/hour for smaller field;
SportsCenter 481	Syracuse	• Access is immediate at Exit 7 off of 481 North; • Butler construction, with some glass treatment on street side; • Estimated 200 paved parking spaces; • Astroturf on all playing surfaces; • Have baseball areas around some of indoor perimeter, one mini-field upstairs, small outdoor field behind building; • Retail (estimated 250 SF) sells basketball, soccer, baseball equipment (limited inventory out); • Seating area for concessions around 300 SF; • Concessions/prep area around 150-200 SF; • Bathroom (men's) includes private changing areas (4); • Food/beverage: bottled and poured beverages, flavored coffee machine, food warmers, no prepared foods; • Limited signage/sponsorship advertising; • User comments: Facility does not seem to have senior managers on site – calls to facility cannot be handled correctly re: scheduling, etc. Don't ever seem to get the same person twice, and/or people who can actually answer questions; • Regional teams reportedly have traveled to facility in winter for games, only to find that other team is not showing up – a perceived lack of coordination and communication; • **Program fees:**

		Indoor soccer = youth $825-$1,075/team, all ages, 11-game season, no playoffs, adult = $1,075/team, 11 games; **Indoor lacrosse** = $1,200-$1,400/team, 9-11 weeks, no playoffs;
Sportsplex (destroyed by fire Feb. 2012)	Utica	• Very poor location, very poor visibility; • Is old Grossman's Lumber building; • Poor access from French Road (cannot make left turn into lot); • Building in front of lot is abandoned; • Old metal building, lot and grounds are old and unkempt; • Overall look is rundown, very amateurish look and feel; • Has no intake/lobby area – does not have space to allow for comfortable layout; • Users complain that facility is unsafe for older players – seams in playing surface, exposed metal beams?; • Users believe that facility is run as well as can be, despite it being an inferior facility; • **Program fees:**
Syracuse Indoor Sports Center	Liverpool	• Debt was paid off on 22-year old facility, owner beginning to reinvest in basic but major capital projects; • Rural location on 2-lane road, proximate to single- and multi -unit residential neighborhoods; • No visibility from major thoroughfares; • Location seems to be entirely land-locked; • Fields are 75 yds X 40 yds (Field #1), 50 yds X 100 ft (Field #2); • Fields have Astroplay surfaces; • Entire facility (inside, outside) in need of major upgrade; • Estimated 100 paved parking spaces, remainder is unpaved gravel; • Exterior is all metal sheeting; • Interior: 2 turf fields, retail area, limited other spaces; • Retail component is very much played up (with signage, marketing materials); • Entire operation has extreme "mom and pop" feel to it; • Program fees: Summer soccer leagues = $750/team adult; Indoor soccer = $850/team adult, $850-$950/team youth; Indoor field hockey = $850/team (includes ref fees), 16 player max, 8-week sessions plus 1 week playoff
The Community Recreation Center	Ithaca	• Fields added on to existing indoor skating rink operation; • Is run as a private non-profit, governed by board of directors; • Capital investment minimized by using donated materials, volunteer labor, gaining discount on land purchase; • Operator comment – "If I had it to do over again, I would have built the turf fields *first*, before the ice rink";
The Ultimate Goal Family Sports Center	Marcellus	• Limited information available, company's Watertown location closed down years ago and facility is now run by Watertown YMCA.
JM McDonald Sports Complex	Cortland	• Access is off Rte. 11, down small residential side street at main county fairgrounds entrance; • Fairgrounds area itself is old, limited, unattractive; • Building location itself seems to be landlocked, unless are able to expand onto fairgrounds space itself;

		• Visibility from Rte. 11 is very limited; • Looks to be standard Butler building; • Single ice sheet, one full size and one mini turf field; • Facility had 2004 opening;

As a result of the site visits, facility management interviews, and individual user and user group interviews conducted by the study, a significant amount of anecdotal information was collected that can be used to help form general and specific strategies and assumptions for a proposed new JCC indoor turf field facility.

Local program comments specific to the current inventory of indoor turf field sports and other indoor facilities within the region are summarized below:

- The primary indoor field sports facilities within the Jefferson County secondary (Syracuse) market, are typically considered to be an inconvenient and sometimes unsafe drive for Watertown-area users during the winter months. Additionally, both large- and small-scale users indicate that management and administrative inconsistencies exist at some of these facilities, that can make use of them frustrating and otherwise problematic;

- For indoor turf field sports use (especially travel and academy soccer, lacrosse, and field hockey), Watertown-area users are used to paying Syracuse-area facility league fees and hourly rental rates when time at the YMCA facility is unavailable.

Extent/Nature of Regional Venue Use

- For indoor turf field use, major Watertown-area programs (esp. travel and academy soccer) tend to utilize Syracuse-area facilities due to limited access to the Y schedule, while other smaller programs (lacrosse, field hockey) with lesser demand can find time at the Y and indoor school and some church gyms because their utilization volumes are relatively small;

- Because turf sports leagues (soccer, lacrosse, field hockey) are typically organized by the host venue, it is acknowledged by local turf sports programs that a new Watertown/JCC facility would need to develop from scratch the capability to successfully market and run two to three sessions of indoor soccer, lacrosse, and field hockey during the September/October to April seasons;

Design Characteristics

- Targeted user groups are most concerned and interested in adequate field of play dimensions being available for their sport – the "look" of and level of interior and exterior finishes at the facility is rarely if ever a primary consideration;

- For turf field programs, fields that allow for full-team adult play (11 vs. 11) would be preferred by travel and academy programs, although many indoor surfaces are smaller and scaled to accommodate 8 vs. 8 youth and smaller play;

- For turf field programs, nets surrounding the fields of play (no boards) tend to be preferred for adult programs as well as travel and academy programs, while surfaces with low or standard-sized boards are accepted for youth, rec and scholastic programs;

- Adequate locker room and lavatory facilities are expected, especially for hockey and other skating use, but in many if not most cases, field sports participants do not require extensive changing areas or shower facilities;

Scheduling Characteristics

- As expected, youth sports groups prefer time slots that are after school/dinner hours on weekdays (e.g. 5pm and later), and mornings and afternoons on the weekends;

- Adult programs prefer evening hours on weekdays (7pm to 11pm), and typically afternoons and early-late evenings on weekends;

- There is little if any call for morning and early afternoon use on weekdays by youth or adult groups;

- College sports programs may have a preference for early morning, other morning, and/or early afternoon time slots on weekdays;

- For turf field play, other NYS facility experience would indicate that league and tournament play encompasses most if not all of available time on weekends, and that any remaining time available for rental during the week (which accounts for perhaps 20% of the total weekly facility time available) is scheduled on weekdays;

- Outside tournament hosting can be both attractive and possible for turf field venues, but league play is then typically bumped from the schedule in order to accommodate day-long or 2- or 3-day tournament play on weekends;

- It is reasonable to believe that some if not most youth programs located at a distance from Watertown and the JCC campus and the proposed facility location, cannot consider use of weeknight or weekend hours at the new facility because of the drive time involved to get to and from the location;

Field/Playing Surface Characteristics

- Soccer programs in particular would prefer that the new facility subscribe to contemporary indoor field of play characteristics – AstroPlay playing surface (or some other manufacturer that is similar), and "boardless" fields of play surrounding by netting (increases safety for players, decreases injuries);

- Astroturf and sport court surfaces (Mondo, or other rubberized) are considered by most indoor turf field programs to be both inadequate and in some ways dangerous for aggressive play, particularly in adult-play applications;

Price Sensitivity

- The general sense from program representatives is that they feel the market is economically depressed, and that rates currently charged at The Y (i.e. $65/hour) are in line with what the local house league market can pay. Having said that, people acknowledge that the "value proposition" at the Y is minimal for more elite field sports training and programs, and that a greater "value proposition" at a new facility would be in alignment with potentially higher rates, whether the market would choose to pay them or not;

- Team fees for indoor turf sports league play at Syracuse-area facilities historically have been in the $850-$1,075 range for soccer, and $850-$950 for lacrosse and field hockey, while per hour rental rates are typically $80-$85 per hour for non-prime time, and $125+ (and sometimes $200) per hour for prime time cross-field play on full-sized fields;

- With respect to field sports play, non-soccer and non-lacrosse programs (e.g. baseball, softball) seem to be exceptionally price sensitive (e.g. they are used to free facility use or low double-digit court/field rentals), and indicate that even if a new facility was built, lower-cost indoor facility options would most likely remain more attractive to them for practice and pick-up play purposes, while market rate rental prices might be acceptable for tournament play;

Amenities and Services

- Basic food service (vending machines, other) is expected, with the offering at The Community Recreation Center (Ithaca) setting a high standard for prepared-grilled food offerings and variety;

- Users do not seem to expect a retail and/or pro shop operation (these operations are generally present at other comparable operations, although current retail industry trends are making it harder to be successful as a facility-based retail sales operator);

- User groups do not seem to expect a limited- or full-service restaurant operation;

- User groups are very aggressive in their expectation that management expertise, customer sensitivity and service, and professionalism be overall ownership, management, and operational characteristics of a new regional indoor facility;

Key U.S. Census Bureau Data

As a state with one of the country's most active youth soccer program volumes, New York State serves as an appropriate geographic territory to identify applicable markets against which the Watertown/Jefferson County market can be measured.

Using 2010 U.S. Census data and estimates, all major markets in NYS were evaluated according to total population and per capita income in order to determine correlations between existing NYS market characteristics, and incidence of indoor sports field facilities and operations.

These markets were then cross-referenced against indoor field sports venue databases, to show the number of indoor field sports facilities per major NYS market, as well as the number of existing facilities in secondary and tertiary

markets not represented by the major market cohort. These results are shown in Table Seven.

Table Seven: Comparable Markets Analysis – New York State

Market (County)	Tot. Population (2010)	# Indoor Turf Field Sports Facilities
Buffalo-Niagara – WNY (Erie)	919,040	4
Rochester (Monroe)	744,344	5
Syracuse (Onondaga)	467,026	4
Albany-Schenectady (Albany, Schenectady)	458,931	4
Utica-Rome (Oneida)	234,878	3
Binghamton (Broome)	200,600	3
Jamestown (Chautauqua)	134,905	0
Watertown (Jefferson)	***116,229***	***1***
Elmira (Chemung)	88,830	0
Glens Falls (Warren)	65,707	0
Market (City, Town, Village)	**Tot. Population (2010)**	**# Indoor Field Sports Facilities**
Hamburg (town)	56,936	0
Ithaca (city)	30,014	1
Watertown (city)	***27,023***	***1***
Vestal (town)	28,043	(see B'ton)
Saratoga Springs (city)	26,586	0
Plattsburgh (city)	19,989	0
Cortland (city)	19,204	0
Oswego (city)	18,142	0
Batavia (city)	15,465	0
Olean (city)	14,452	0
Corning (city)	11,183	0
Ogdensburg (city)	11,128	0
Massena (village)	10,936	0
Canandaigua (city)	10,545	0
Potsdam (village)	9,428	0
Brockport (village)	8,366	0
Geneseo (village)	8,031	0
Canton (village)	6,314	0
Wellsville (village)	4,679	0
Skaneateles (village)	2,450	0

Source: U.S. Census 2010, NYS West Youth Soccer Association

While the NYSWYSA database may not include all available indoor field sport facilities in every market, it does provide a reliable standardized measure for comparing one market against another. As would be expected, and with some exceptions, larger metropolitan areas in New York State exhibit substantially larger inventories of indoor venues than do smaller markets.

This table would indicate that Monroe County has the largest number of indoor facilities (5) in the top 10 NYS county markets, followed by Erie, Onondaga, and Albany-Schenectady (4 each).

Additionally, the table represents that a wide range of indoor field sports venues per 100,000 of population exists between markets. This range, represented from high density of venues per capita in each county to low density of venues per capita, is summary as follows:

Broome	One venue per 65,000
Oneida	One venue per 78,292
Tompkins	One venue per 101,000
Onondaga	One venue per 115,000
Jefferson	One venue per 116,229
Monroe	One venue per 146,660
Erie	One venue per 227,000

This facility density summary would indicate that, with program and facility demand being equal among county markets, the Jefferson County market, at one indoor turf field facility, is relatively underrepresented by indoor field sports facilities when compared to the six other NYS county markets that current have indoor turf sports facilities.

Older, Recently Opened, and Pending NYS Facilities

Beyond the broad U.S. indoor field sports facilities market and the local/regional market that is most familiar to Watertown-area programs, it is important for the purpose of this JCC analysis to examine subsets of the facilities universe that can serve as strategic and operational reference points for a potential JCC indoor field sports facility operation.

In order to accomplish this, an evaluation was made of a broader indoor field sports facilities in major NYS markets that extends beyond the Syracuse market, as well as in NYS markets deemed to be comparable in size to that of Watertown and Jefferson County, with particular interest in facilities designed to accommodate either, and perhaps a combination of, youth sports programs, interscholastic, and intercollegiate field sports programming.

By identifying and understanding the strategic reasoning behind these development projects, it was expected that broad industry and market trends could be identified that would have relevance to the strategic decision-making that would need to be applied against facility development considerations for JCC.

Using a variety of industry and professional contact resources, an inventory of long-standing and recently built facilities, as well as pending or under construction facilities, have been identified in New York State by the market study.

This inventory is represented in Table Eight.

Table Eight: NYS Indoor Field Sport Facilities Inventory

Facility	Location	Legal Entity Type	# Indoor Fields	Year Opened/ Added	Comments
OLDER FACILITIES					
Akron Sports Park	Akron	Private	3	Unknown	Might have been closed – phone and e-mail disconnected
Rochester Sports Garden	Rochester	Private	3	Unknown	Appears to be low-cost complex and provider.
Sportsplex Indoor Soccer Center	Tonawanda	Private	2	1982	Very old building, former indoor tennis center, limited flexibility.
Syracuse Indoor Soccer Center	Syracuse	Private	2	1984	Debt paid off, owner beginning to reinvest in facility.
NEWER FACILITIES					
All Star Sports Arena	Rochester	Private	2	2006	Converted in 2006.
Brighton Sports Zone	Rochester	Private	2+	2006	Converted in 2006.
CNY Family Sports Centre	Baldwinsville	Private	2	Unknown	Rumored by other facilities in market to be for sale.
Cortland	Cortland	Private Non-Profit	2	2004	$1 million in foundation support for construction.
Epic Center Indoor Soccer	Lancaster	Private	2	1998	Very aggressive operation, multi-sport programming.
Sahlen's Sports Park	Elma	Private	2	1997	Significant corporate/family financial support.
SportsCenter 481	Syracuse	Private	2	Unknown	Fairly traditional operation.
The Field	Ithaca	Private Non-Profit	2	2001	Fields added on to existing indoor skating rink operation
Total Sports Experience	Rochester	Private	3	DNK	Multi-function sports and non-sports capability.
Turin Sports Dome	Fairport	Private	1	DNK	Converted tennis center.
Ultimate Goal	Syracuse	Private	2	DNK	Company's Watertown location closed down .
Sports Dome	Endicott	Private	3	2006	Large inflatable dome.
PENDING FACILITIES					
Canandaigua	Canandaigua	Private Non-Profit	TBD	TBD	1-2 field facility planned, in discussion since early '00s.
Greater Binghamton	Conklin	Private Non-Profit	3	2005	Phase Two to include double-sheet ice skating component.

Source: Paradigm Economics interviews and database

- Only two of the state's existing facilities, The Community Center (The Rink/The Field) in Ithaca, and the Cortland facility, operate as a private non-profit (501 (C)(3)) entity;

- The two proposed new NYS facilities are proposing to construct and operate as private non-profit entities;

- Four facilities are considered to be "older", and 12 facilities are considered "newer" and are estimated to have come on line since 1996, with five and perhaps six either being built or converted since 2001.

A summary of significant characteristics of the facilities highlighted above is as follows:

Reality of Economic Breakeven Potential

- Because these facilities are all operating as either private for-profit or private non-profit entities, they have a financial imperative to at least break even on operations and repayment of debt service. There is no public subsidy or underwriting available to these facilities if they suffer a financial shortfall (unlike the operation of most ice rink operations);

- The potential ramifications of private ownership and operation can be felt by user groups. As employees and utilities are the number one and two annual expense line items, these two areas tend to be cut back if a facility experiences difficulty in generating targeted revenues. As a result, customer service and user comfort tends to decrease if and when this occurs. The current Vestal facility in particular seems to have these characteristics, and some facilities in the Syracuse area are rumored to have lean and inexperienced staffs and what seems to be lower indoor temperatures (as a result of lowered utility utilization) as well;

- Elimination or minimization of debt service, when possible, can relieve financial pressure from facilities. The Ithaca facility in particular exemplifies how creative construction and development strategies can lower building debt service – discarded light fixtures from Home Depot were utilized to light the indoor skating facility, conveyor belt remnants were used to piece together floor surface covers at the rink, and donated materials were utilized to build bleacher seating using 100% volunteer labor.

Reality of Multi-Purpose Utilization

- Even when planned for in advance, true multi-purpose utilization of an indoor field sports facility is difficult to attain due to the lack of attractiveness of indoor facilities during the spring-summer-fall months for either sports or non-sports programming;

- In actuality, indoor facilities tend to fall back on multi-purpose utilization as a means for making up for an inability to schedule rental times during the off-season at a volume great enough to meet operating projections. Under this scenario, facilities are often forced to retrofit themselves and reorient their operations and marketing staffs in a multi-purpose manner that was originally unintended and unprepared for during the facility's planning, grand opening, and stabilization phases.

Benefits of Multi-Function Program of Requirements

- Municipal facilities in particular are tending to bundle a variety of use opportunities into their facility planning and design, in order to extend the overall economic impact that is generated by the initial facility project. However, this tendency is not typically evidenced in private facility development projects, as private sector developer, owner, and operator groups tend to have limited resources to invest, a small margin for financial error, and therefore a specific focus on the intended indoor sports facility and its specific operation only;

New Facilities Have Active and Stable Programs as Anchor Tenants

- Most facilities from the above list were committed to and developed knowing that they had existing youth soccer, youth lacrosse, and in some cases high school and college sports programs that would be either league participants or contract users upon opening. This provided these facilities with guaranteed annual rental revenues from the outset;

Nature of Legal Entity and Accounting Practices Can Make Assessment of Profit-Loss Difficult

- In some cases, facility operating detail for for-profit operations can be either unavailable, and/or perhaps difficult to decipher. On the other hand, non-profit entity statements are by law readily accessible, but allow for accounting practices that can make true determination of operational characteristics difficult as well;

Supplemental Analysis of Regional Comparable Facility Operations – Monroe County/Rochester Market

On behalf of a Finger Lakes Community College fieldhouse study project completed in 2011, Paradigm conducted a comprehensive analysis of indoor turf, indoor multi-sport, and indoor track facilities within the Canandaigua, Ontario County, and Monroe County geography, so as to understand the competitive context within which any new FLCC fieldhouse facility (indoor track, turf field use) would compete for targeted sports group users, programs, and revenues.

Paradigm conducted a broad facilities identification exercise that captured both indoor and outdoor facilities and locations identified as being in both the Canandaigua market proper, as well as in contiguous markets considered to be within a broad regional market within and without Ontario County.

This Ontario County and Monroe County indoor fieldhouse/soccer complex inventory is relevant to the JCC indoor turf field component analysis, as Jefferson County-based soccer programs in particular have indicated that they routinely access Rochester-area indoor soccer facilities to supplement their access to the Watertown Y facility.

As a supplement to Onondaga-area indoor turf facility research that has been conducted on behalf of this JCC study, a summary of characteristics of indoor soccer-centric facilities in the Monroe County market is provided in Table Nine.

Table Nine: Monroe County Regional Indoor Specialty Use and Multi-Sport/Turf Field Facility Inventory

Facility	Ownership	Sports Supported	Building Specs	Programming	Marketing	Other	Users
All Star Sports Arena 557 East Ridge Road Rochester	Lonestar Recreation (private)	Travel Soccer, lacrosse, baseball, football, kickball	40x80 yd boardless field; 40x60 yd boardless field; 30,000 total SF	Multi-sports afterschool programs; lessons; youth and adult leagues; private rentals	"tournaments, camps, preseason practices, special events, corporate outings, birthday parties"	Has main lobby area, game area, snack bar; Was converted from a boarded field/rink in 2006; Empire Sports Solutions does naming/sponsorship sales;	Empire United Soccer; Pittsford Mustangs Soccer Club; Fairport Soccer Club; Victor Farmington United Soccer; Chili Soccer Association; Penfield Rangers; Penfield Strikers; Rush-Henrietta Soccer; Honeoye Falls Blaze Soccer Club
Brighton Sports Zone 3195 Brighton Henrietta Road Rochester	Lonestar Recreation (private)	Travel soccer, lacrosse, baseball, football, kickball	40x100 yd boardless 40x100 yd boardless 20x30 yd walled	Boys and girls leagues ages 11-16, and scholastic; $100 cost for 2-hr birthday party for 10	"Rochester's premier indoor sports facility"	Converted from a skate park to a turf field facility in 2006	
Hot Shots Volleyball 1046 University Ave. Rochester	Private	Volleyball	Indoor hardcourt, indoor sand, and outdoor courts	Junior events, adult leagues, tournaments	"Real beach volleyball"	Has a food facility – Hot Shots Restaurant	
Rochester Sports Garden 1460 E. Henrietta Rd. Rochester	Private	Indoor soccer, "soccer tots", basketball, batting cages, table tennis	75x175 ft boardless 75x125 ft boardless 3 basketball courts 2 batting cages Fields are field turf; Have electronic scoreboards;	Batting clinics, adult basketball leagues, soccer leagues and tournaments, rentals, men's annual holiday tournament	"Rochester's premier indoor sports facility"	$25/hr rate for basketball court; $45/hr rate for 2 batting cages (youth league rate); Hours = 7 days per week, M-F 12n-midnight, open 10a weekends; Installing new turf July 2011; Have relationship with West Ham United Int'l	

						Academy, and Super 9 Soccer	
Total Sport Experience	Private	Soccer, lacrosse, basketball, baseball, softball, indoor football	50x80 yd boardless 28x62 yd boarded 25x25 yd warm-up 40x65 ft basketball All Astroplay turf	Leagues, camps, clinics, academies, tournaments	"Total Sports Experience is the ultimate sports center!"	$225/hr. full boarded field, $145/hr half field; $125/hr boarded field $60/hr training area $40/hr basketball court	
Turin Sports Dome 260 Hogan Road Fairport	Lonestar Recreation (private)	Travel soccer, lacrosse, baseball, football	40x80 yd boardless Field is Supergrass Outdoor facilities include 2 pools, tennis courts, 40x80 yd field, snack bar, game room, basketball court, locker rooms, pro shop	Kickball leagues (@ $700/team) – 8-wk session, runs Nov.-April		"Adult beverages allowed" at kickball leagues	
Valle Sports Indoor Baseball 4659 Ridge Road W. Rochester	Private	Baseball, softball, field hockey, soccer, lacrosse	Two buildings, 15,000 SF facility Batting cages 18-hole golf simulator Turf field			Retail store for baseball and softball equipment	

Source: Consultant research.

Table Nine indicates that within the regional Rochester/Monroe County market, there exist five active indoor rec sports facilities having all-weather turf surfaces either exclusively or in combination with other hard surface areas. These facilities are all privately owned and operated. Three of the facilities – All Star Sports Arena, Brighton Sports Dome, and Turin Sports Dome – are owned by a single owner/operator, Lonestar Recreation. As privately owned and operated facilities, the sole purpose for their existence is to generate revenue and to perform at a level that produces annual positive net income. Therefore, their legal structures, business models, and marketing, booking, and scheduling priorities are assumed to focus on this revenue-first operating objective.

The dimensions of the indoor turf surfaces represented by these five facilities were significant to the FLCC fieldhouse analysis, and are relevant to JCC design and program planning as well. These facilities' largest surfaces are of the following dimensions: 100x40 yards, 80x50 yards, and 80x40 yards. These fields can accommodate play up to U12 youth soccer specifications (100-105 yard length min/max, 40-55 yard width min/max), and they can almost accommodate U13 play (100-110 yard length min/max, 50-60 yard width min/max). Adult play requirements specify 110-120 yard length min/max, and 65-80 yard width min/max.

These five facilities typically include some combination of ancillary and support spaces that include locker rooms, game rooms, concessions areas, lounge areas, and retail components.

In some cases, it is estimated that the hours of weekly operation for these business operations – that is, how many hours of rental time are available to outside programs and individual users - can reach 90+.

In addition to the five identified indoor turf surface facilities, the regional Monroe County market has a baseball-specific privately owned indoor facility operation (Valle Sports Indoor Baseball) and one privately owned indoor volleyball facility (Hotshots Volleyball).

D. Higher Education Center

As currently conceived, the proposed JCC Higher Education Center (HEC) component of the development project would be intended to provide additional space required for new regional programs that were identified in the "Strategic Directions" component of the JCC facilities master plan in addition to providing facilities for higher education partner colleges to offer bachelor's, master's and professional programs to the community.

In the JCC facilities master plan document, the Higher Education Center is identified as the plan's "most aggressive initiative", with the broad and long-term intent of the investment being to reach new populations in the Jefferson County market, and to positively impact the ability of the school to both attract and retain students.

In the current concept for the HEC, the facility has flexible instruction space for JCC credit and non-credit coursework particularly in the health sciences area, space for Upstate Medical University to offer graduate medical education, instructional space for 5-8 other partner colleges, and administrative and support services space.

The HEC would allow the college to expand existing high demand programs such as nursing as well as create new programs to meet local work force needs. It is envisioned that some of the programs housed in the HEC would have an instructional tie to the new events center such as sports management, hospitality, and tourism.

A preliminary space program for the HEC component of the project would have a net assignable square footage of 34,000 SF including 10,000 SF for Upstate Medical Center.

Summary Comments – Section Two

Research and analysis of "enhanced fieldhouse" (or "events center") projects at the state and national level indicate that projects of this type tend to have a development/project cost of $25 million-$35 million, and that they are constructed and operated as either stand-alone operations, or in conjunction with other combinations of facility components (arena, fitness center, indoor pool, other) that when viewed as a comprehensive project, are intended to address sports, rec, intramural, and in some cases live entertainment needs of not just the on-campus but also the regional off-campus community.

Facilities of this type with an "events center" intent are by definition more technical in their design, and therefore more expensive to build, so as to attempt to accommodate a targeted variety of outside events that are typically ticketed events, trade shows, sports competitions requiring some level of seating capacity, trade shows, private business functions, and large-scale banquet functions requiring enhanced food service. In this way, they are different in design (i.e. more elaborate) and cost (i.e. more expensive) than are "fieldhouse" facilities. Events center facilities with such a broad and revenue-generating programmatic intent will find themselves operating in a regional (or broader) competitive public assembly facilities environment, in which they will need to be designed, managed, and marketed so as to occupy a niche within this competitive market.

Financial performance objectives for such facilities are impacted by economic, demographic, and competitive characteristics and limitations of the regional target market. In the Jefferson County/Watertown market, there is no true "events center" facility that is capable of serving a broad spectrum of target audience and program/event needs. That said, similar "event center" projects at Binghamton University and Onondaga Community College have had optimistic intentions regarding outside event, activity, and revenue-generating targets and potential as these apply to

their respective regional markets, but in both cases these have been tempered to some degree by the realities of intercollegiate athletics and other campus use conditions, design limitations (imposed by construction budget thresholds), and also by live and touring entertainment industry constraints that are outside the control and influence of the facilities themselves.

Indoor ice skating venues in New York State represent a variety of sizes, programmatic focuses, and price points for users. In general, older municipal facilities throughout the state represent the "low-cost" provider option for local and regional skating (esp. youth hockey) programs. This is because responsibility for debt service payment on these older buildings is generally not a consideration, and annual operating expenses are oftentimes absorbed into the locale's overall operating budget. As a result, user programs become comfortable with relatively lower rental rates offered by these facilities, and they oftentimes scale their programs so as to make them affordable based on what ice time rates have been and currently are. In Watertown, the public single-sheet skating facility represents one of these generations of facilities, as indicated by its relatively limited overall annual utilization and its $70/hour ice time rental rate.

Within the "newer rink" cohort in NYS, research indicates that there have been a number of significant financial failures at the single-, double, and four-sheet rink level. A number of newer facilities have seen bonds go into default or have had their doors closed due to inability to pay their bills. These outcomes have occurred at both privately owned as well as at private non-profit ice rink business operations, and at facilities build within the last 10-12 years. It is either understood or inferred that these building failures have occurred as a result of some combination of (1) overbuilding of facility that has created an unmanageable debt service liability; (2) inability of local resident skating programs to effectively grow into the building's available ice time; (3) inability of local resident skating programs to afford the hourly rental rates required to cover the building's annual operating costs (and possibly debt service); and (4) overreaching of ownership/management in their belief in their ability to own, manage and operate a facility to its bottom line.

Indoor turf field facilities in NYS, when compared to NYS ice skating facilities, represent a very different type of facility investment and business operation. Relative to the overall inventory of NYS indoor ice skating facilities, NYS indoor turf field facilities tend to be newer, and almost exclusively privately owned and operated. This is due for the most part to the fact that these facilities are relatively less expensive to design, to build, and to operate. They are attractive from an investment and income-generating standpoint. Also, they have a broader range of programmatic opportunities (i.e. soccer, lacrosse, field hockey, baseball, softball, flag football, other) available than do indoor skating rinks Lastly, indoor turf field complexes tend to cater to local-regional soccer communities, and these soccer programs look for not only field time to rent, but also for organized leagues and tournaments in which to participate.

Unlike indoor skating facilities, which serve more or less as a passive "rental hall" by renting contract ice time to youth hockey associations primarily, indoor turf field

operations are required to develop and manage the programs in which local, regional, and other soccer programs and teams participate. Therefore, in essence, this *responsibility* affords the facility a greater degree of *control* over everyday use of the facility. It is not beholding to the success of outside youth sport organizations and operations. In turn, the facility operation needs to exhibit a greater degree of capability in the areas of program development, marketing, and scheduling than does the management of the typical indoor skating facility.

The relative economic viability of indoor turf field operations in NYS can be inferred by examining the history of such facilities since their development; with only a few exceptions, these (generally privately owned and operated) indoor facilities as a group do not exhibit the defaults, business closures, or changes of ownership that are exhibited by indoor skating facilities in NYS that are of a similar generation.

The school's interest in developing 34,000+ SF of Higher Education Center (HEC) on campus and as a component of the overall events center development project is supported by the school's own facilities master plan market research. From a broad and long-term strategic planning standpoint, adding classroom space, space for targeted new programs, and opportunities to evolve 4-year degree paths for JCC 2-year students necessitates a commitment to and strategy for funding and development of a new on-campus facility to support this intention. By extension, inclusion of the HEC within the JCC events center funding plan will afford the school certain advantages in its effort to secure State of New York financial support for the overall development project, which is currently pegged at $44.3 million.

The combination of the HEC, events center, and a potential ice rink or turf field component is intended to create a more competitive position for JCC relative to its NYS community college cohort, while at the same time serving the entertainment, recreational, and educational needs of the Jefferson County and broader regional community.

III. MARKETABILITY SURVEY

Ice Sheet vs. Turf Field Demand Analysis

In the case of the JCC on-campus facility development project, "marketability" of the project takes a variety of economic, non-economic, and demand-driven variables into consideration. Key among these variables is the distinction between and evaluation of the opportunity to invest in and operate a single-sheet ice skating component as a secondary facility paired with a new events center, versus an indoor turf field facility.

An earlier section of this study assessed both industry characteristics and standards for both types of indoor facilities, as well preliminary regional market characteristics in the areas of comparable facility inventories, ownership and business model trends, rental rates and operating revenues and expenses, and typical keys to operational and/or financial performance success or failure.

In order to assist JCC in its evaluation of the ice skating sheet vs. indoor turf field project component decision, Paradigm conducted a deeper assessment of the local existing facilities and user demand market for both facility types. This assessment looked at key user group characteristics for both facility types, as well as the current state of local facility operations. Paradigm then developed a summary of facility type pros and cons based on this user group and facility operations assessment. This comparative analysis is presented in Table Twelve below.

Table Twelve - Turf Field vs. Ice Sheet Comparison

Ice Sheet	Turf Field
Key Users: • Watertown Hockey Association • Privateers (minor league pro hockey) • Figure Skating Club of Watertown (FSCW) • High school hockey (IHC/Indian River/Watertown) • Men's teams (3) • Mountaineers (Ft. Drum)	***Key Users (potential, non-JCC):*** • Northern NY Youth Soccer League (NNYYSL) – travel, premier soccer • Youth lacrosse • High school baseball, softball • High school soccer, lacrosse • Youth baseball, softball • Regional colleges/universities
Current state: • Ice Arena has 2,600+ annual hours available • WHA utilizes approx. 700 hours annually at Ice Arena • Rates are $70/hr. (youth/public), $80 (adult), $100 (admission events) • Season is Oct.1-March 30 • WHA utilizes Alex Bay, Canton, Pulaski, Cicero rinks for additional time in-season, and off-season	***Current state:*** • YMCA facility schedule is monopolized by in-house rec soccer leagues • NNYYSL has Y access on Sundays, otherwise uses local gyms • Y charges $65/hr. for field time • Size of Y turf field is relatively small, restricts play to 6 vs. 6 • NNYYSL travels as far as Albany, Rochester, Buffalo, Syracuse, other markets for indoor league and tournament play

Ice Sheet – Pros	Turf Field – Pros
• Would allow WHA to consolidate its travel and house programs at city-located rinks • Would afford some opportunity to create/book hockey tournaments • Would ease scheduling pressure and lack of "prime time" access that is perceived by larger program users	• Facility would be unique to North Country market (based on size, flexibility of space) • Would provide space/time for a wide variety of field sports types and programs, at a variety of competitive levels • League and weekend tournament play would likely attract non-local teams
Ice Sheet – Cons	**Turf Field - Cons**
• Current users would be resistant to paying more than $70/hr. rate • FSCW program would not utilize more hours • WHA non-Ice Arena hours currently total 300 annually, are not enough to drive income generation at a second facility • Lack of co-located sheets would not optimize 2nd sheet investment • Skating facility is costly to build, costly to operate	• Y facility might lose some business to JCC facility • Current Y hourly rate of $65/hr. sets the market, is low compared to other NYS markets (at $125-$195 per hour) • "Box with turf" facility is relatively inexpensive to build, relatively inexpensive to operate, when compared to ice rink and multi-purpose arena-like space

Summary Discussion – Ice Sheet

From a market demand standpoint, user interviews conducted by Paradigm indicate that the call for a 2nd sheet of ice in the Watertown market is more of a "want" than it is a "need". The Watertown Hockey Association's (WHA) use of variety of regional facilities during the Oct.-March skating season is inconvenient to the program, but the current annual hours needed by the WHA to conduct its typical slate of hockey programs do not support this circumstance as a prime reason for incremental ice sheet development in the market.

Based on both Paradigm project experience as well as Jefferson County demographic and economic characteristics, the realistic expectation would be that WHA program growth with access to a 2nd ice sheet would be minimal, therefore, at the current hourly rate of $70 charged at the city ice arena, their ability to generate a necessary level of sustainable income for a new facility would in all likelihood not cost-justify the expense of a new JCC single-sheet skating facility development and operation.

The Privateers hockey team has caused some changes to the overall use schedule at the Ice Arena, but according to the city's recreation department most of ice time loss has been to skate and shoot, family skate, Rock n Skate, and other public programs (i.e. key user groups seem to not have been inordinately inconvenienced by the injection of the Privateers into traditional Ice Arena schedule).

The main issue that the WHA has relative to Privateers hockey is the lack of adequate locker room space that other user groups now have, which is causing traditional ice arena program participants to use common areas (lobby, other) for changing purposes, which in turn creates the potential for public and participant safety issues.

Beyond the WHA, secondary users such as high school hockey and figure skating indicate that they would not benefit from 2nd ice sheet, as they have no current need for more ice time, other than to possibly have some degree of scheduling pressure removed from the Ice Arena and more attractive time slots open up for them as a result.

It is possible that two sheets of ice in the Watertown market proper might promote some new weekend tournament capability and activity during the season, but two single-sheet rinks being at disparate locations, even though geographically close, would be suboptimal and would likely have some limiting impact on the ability of the WHA, outside hockey tournament promoters, and the market in general to compete for multi-day weekend tournaments. Additionally, weekend games scheduled by the by Privateers at the Ice Arena would preclude the scheduling of multi-day weekend tournament play requiring two ice sheets.

With respect to user rates, current Ice Arena skating programs are of the position that the $70/hr. rental rate is the top end of what they can afford for ice time. These programs do acknowledge that the $70/hr. rental rate is inordinately low relative to other markets in NYS, and that other markets in NYS charge two, three, and even four times that amount for an hour of ice time.

It is estimated that the WHA, as the facility's largest annual consumer of ice time, contributes approximately $50,000+ in annual income to the Ice Arena. Stand-alone single-sheet rinks can typically be expected to have annual operating expenses, absent debt service, that are at minimum four to five times that amount.

Summary Discussion – Turf Field

The Northern New York Youth Soccer League (NNYYSL) indicates that its program growth has been steady and substantial, and that limits on the program's development are by and large related to lack of accessible regional facilities for high-end indoor soccer training and play. The NNYYSL currently has 1,000 participants in its travel program, and 175 participants in "academy" program.

The former Ultimate Goal soccer/fitness facility at the fairgrounds is the area's sole location for indoor turf field play. Now a part of the local YMCA, the size and functional characteristics of the facility's turf field components are a limitation for travel and premier programs; "live walls" on both fields at the Y do not provide realistic conditions for elite players and programs, and the small dimensions of the playing surfaces reportedly limit the facility to a maximum of 6 vs. 6 play, which in turn inhibits development of full-field skills training and conditioning for older, more skilled and more aggressive players.

Development of a full-size indoor turf field facility (approx. 110 yds. by 80 yds. in maximum dimension) would mirror other NYS large-market indoor soccer facility projects (which typically have been accomplished through either existing facility

conversion, or new-build). The ability to partition such a full field turf surface into thirds (using drop-down screens) would promote active tournament play during the indoor season, and would maximize overall field/space utilization and by extension annual revenue generation.

Paradigm interviews indicated that experienced youth/rec soccer program expertise seems to be prevalent in the regional market, and that this expertise is exceedingly optimistic that regional youth/travel soccer programs in particular would benefit significantly from the investment in and location of a new indoor turf field facility in the Jefferson County market.

From a revenue generation standpoint, it is likely that even at lower hourly rental rates currently charged by the Y for turf field time, the revenue potential for regional indoor turf field would be greater than that of a new single-sheet skating facility, and that a surplus net income position could more readily be attained by a turf field facility absent debt payment responsibilities and under a "shared expense" model with JCC.

Final Discussion and Observations

When the economic and non-economic goals that have been established by JCC for the overall on-campus facility development project are laid over the ice sheet and turf field summary discussion, it becomes evident that a turf field project has more relative merits for JCC than does an ice sheet project from a market demand, projected financial performance, and broad economic impact standpoint. This position becomes stronger when the athletic and non-athletic needs of the JCC campus are considered.

Unless JCC is committed to adding men's varsity and women's club hockey to its current or near-term intercollegiate sports program offering, the ice rink would have no utility whatsoever for JCC athletics. Though JCC rec and intramural skating programs could certainly benefit the student population, and even considering that the resident student population will be increasing with the advent of new on-campus housing units, the sheet of ice would provide only very specialized rec and intramural opportunities that would likely capture the attention and participation of a smaller subset of students than would a turf field facility.

On the other hand, a turf field facility would immediately afford JCC athletics the opportunity to utilize facility access on behalf of existing athletics programs. JCC soccer, lacrosse, baseball, and softball would all benefit from off-season access to an indoor all-weather turf surface, and such access would allow the department to discontinue having to rent YMCA facility time for program practices during the indoor off-season. The department would save money on off-site facility rentals, and could provide convenience and better play quality to athletes by consolidating off-season practice and training at an on-campus facility. In essence, this would afford JCC athletics an economic, convenience, and student-athlete recruiting benefit.

Additionally, the turf field facility, because of its programmatic flexibility, could more readily coordinate with the proposed JCC multi-purpose arena/fieldhouse and existing JCC gymnasium schedules, creating more athletic department flexibility with respect to managing a master schedule for the three facilities in the areas of athletic competitions, athletic practices, and rec and intramural program development and execution.

Also, it is likely that the marketing and p.r. value that a turf field facility would generate for the college would exceed that of an on-campus skating facility, in that the dividable turf surface would allow a higher level of participant volume in the building during peak use hours than would an ice rink. Higher-volume foot traffic to the facility (participants, families, friends, other) would equal more visitors to campus, thereby creating a relatively more aggressive student recruitment tool as well as generating incremental word-of-mouth for the school.

Lastly, from an economic impact standpoint, it is likely that weekend soccer tournaments could at least approximate if not exceed the volume of local and out-of-town hockey tournament participants that could be generated by special events hosted at two sheets of local ice. This would provide annual incremental benefit to the local Watertown hospitality trade during the tourism industry's traditional "shoulder" and off-season months of October-March/April.

Market Demand Survey

The conducted industry analysis (local/regional facilities inventory, identification and analysis of comparable "enhanced fieldhouse" and indoor turf field projects and comparable operations) becomes most useful when it is combined with a marketability survey that provides an indication of the proposed JCC new events center facility's attractiveness to a variety of identified and targeted user groups.

Those potential targeted potential user groups typically are combined in three general user group areas: on-campus users, historical local/regional market users, and targeted national users either currently active at buildings elsewhere in the market or not at all active anywhere in the market.

These three general user group areas were assessed by Paradigm using first-person phone interviews, analysis of available websites, and evaluation of provided public assembly facility industry publications and other hardcopy materials.

In addition to the extraction and analysis of commentary provided by potential users relative to the description of the proposed JCC events center facility, events, programs, and promoters familiar with the regional Jefferson County and Onondaga County indoor facilities inventory also provided their experience-based assessments of these existing facilities. Therefore, summaries of these user group interviews include commentary on both the attractiveness as a host venue of the proposed JCC facility, as well as on the pros, cons, and relative attractiveness of existing facilities in North Country and Central

New York that are considered generally and by the touring entertainment industry to be "competitive" with the proposed JCC events center project.

On-Campus Users

JCC Student Activities – JCCSA serves the internal campus community by organizing and hosting lectures and live concerts primarily. The available 400+ seat theater and 2,000-seat gymnasium are not currently a match for the types of events that students want. Seating capacity is a limitation, as well as fire marshall requirements. The student population desires a facility with a "cultural arts center"-like capability, so as to attract bigger acts capable of generated larger grosses (i.e. Blue Man Group, Stomp, Phantom of the Opera, dance groups). Other ideas include a gallery for exhibiting student art work.

Other regional facilities are deemed to be suboptimal – the State Office Building has only 700 seats, has no real lobby area. Watertown High School is an auditorium at approximately 1,500 seats. Indian River High School has a relatively new and high-tech auditorium, at approximately 1,200 seats, has been used by some degree by the DPAO and AMP Entertainment, but has a more-or-less lean and unproven track record.

The JCCSA calendar is typically September-May, including commencement. JCCSA has a budget for events, and can take a promoter's risk on shows. Students technically have the final say on how money is spent. Shows usually come close to breaking even, but a typical shortfall is $5,000 for a sold-out show.

JCC Athletics: The intercollegiate athletics on-campus practice facility inventory is already limited. Athletics department access needs to be factored in to the overall management/scheduling plan for the events center facility, in combination with the existing gymnasium and a potential indoor turf field facility. JCC spring sports will need access to the facility beginning in January. Currently, JCC athletics programs are forced to rent time at the Watertown Y indoor facility for off-season training and/or pre-season practices.

The department does not have an issue with playing intercollegiate games in the old on-campus facility, to facilitate revenue-generating events at a new events center. It is hoped that the new events center will relieve some of the practice, intramural and rec program stress that currently exists at the old building.

Local Users

DPAO – Per Joe Rich of the DPAO, 52% of his event attendees are from outside of Jefferson County. The DPAO has had success with both outdoor and indoor events, and has developed a niche for itself within the regional touring entertainment market, particularly in the areas of country and classic rock music. Historically, the DPAO has

promoted 6-7 local ticketed shows per year, four indoor and two outdoor. Indoor shows have historically been restricted to those that require no more than 2,500-3,00 seating capacity; a recent DPAO Bill Cosby comedy show had a ticket manifest (i.e. tickets available for sale) of 2,500 seats. It is Joe's professional belief that a new indoor facility in the market, if designed and invested in with some degree of multi-purpose utilization in mind, would allow the market to attract more outside events and ticketed entertainment in the aggregate. Recent DPAO shows include Bill Cosby, Journey, and Blake Shelton.

Greater Watertown North Country Chamber of Commerce – With the area's current inventory of indoor facilities particularly, the GWNCCC cannot grow its existing events, or bring new events to the market.
Priorities for the Chamber that would afford it the opportunity to expand its annual event roster and to better serve its member base are as follows:

- Provide a presentable and professional venue that has adequate parking;
- Provide a contemporary location for hosting travel and trade shows;
- Provide a contemporary location to host local, regional, state and national conferences; and
- Provide a large enough facility that would be able to accommodate outside catering.

Currently, key Chamber events for which indoor location options need to be increased are as follows:

- Armed Forces Day Luncheon (sells out at current location, which is at max. capacity of 400);
- Athena Dinner and Shapiro Award Dinner – average 200 participants and could grow to 250 with additional seating capacity; Annual Business/Meeting of the Year (event was revitalized in 2011, over 150 in attendance that year);
- Business Expo – currently held at State Office Building. SOB location has dampened event attendance, due to poor building logistics and limited to no parking availability;
- Job Expo – historically held at the Fairgrounds Arena due to lack of alternative locations; and
- Farmer's Market – currently has 100 vendors outdoors, can be expanded and vendors have asked for an indoor option.

Amp Entertainment – Amp Entertainment concert size is reportedly 750-5,000 patrons. AE believes it could book 10+ shows in a new events center at the JCC campus, in the areas of kids' shows, concerts, basketball tournaments, and 3-on-3 basketball events. AE strategy is to counter-program against DPAO, by focusing on heavy metal music, tribute bands, and kids' shows. AE shows use Watertown High Schools (1,500 seating for kids' shows)for kids' shows, and the county fairgrounds for outdoor.

Flat/Consumer Shows and Local Indoor/Outdoor Concerts: At an estimated 70,000 SF, the JCC events center facility will be essentially the same size as the SRC Arena at OCC, and the Oncenter exhibition hall in Syracuse.

In general, key technical specifications for successful hosting of trade, flat, and consumer shows are good docks, open space, an a ceiling structure that can handle a load capacity of 100,000+ pounds. Many shows need to have access to electrical service (from a ceiling grid), as well as computer service, phone lines, and credit card swipe technology. The lobby needs to be functional, but not necessarily fancy. Trade show events are able to use portable ticket booths, instead of permanent ticketing areas. The recommendation provided by most trade show operators is that money be put into loading docks, seating capacity, rigging capability, then concessions capability, and that spaces that are not revenue-producing (such as lobby areas) be invested in secondarily.

A 5,000-seat facility at JCC (estimated seating capacity) would be positioned between large-act indoor arenas and small-hall music clubs. At 5,000 seats, the facility will likely compete for talent that might appear at NYS casinos such as Turning Stone, as well as "classic" music acts in the rock, pop, and heavy metal categories. The JCC events center would also have the same seating capacity as SRC Arena at OCC, a circumstance which might create both opportunities and challenges from an event booking standpoint.

The facility needs to have adequate storage, potentially for a 40'x60' stage, 600+ tables, chairs and pipe and drape for 350+ 10'x10' booths, a basketball floor, and other miscellaneous equipment and furniture.

Regarding potential banquet/ballroom-like use at JCC, the Chamber's opinion in particular is that there is an opportunity to complement existing hotel spaces, Alex Bay facilities, and Ft. Drum spaces, and that there is a lot that can be done with pipe and drape and floor coverings to fit out a large open space in an attractive manner.

Non-Local Users

A potential attraction category for the proposed JCC events center is the subset of national ticketed touring entertainment that routes shows annually through indoor and outdoor entertainment venues throughout the U.S.

It was necessary to estimate the interest level that shows from this program category had in the primary decision areas of Jefferson County geography and proposed JCC events center facility size, to determine the likelihood that they would entertain the idea of committing their shows to the JCC events center facility.

In this effort, identified and assessed information from both its historical project database as well as from readily-available industry resources for a representative cross-

section of key national touring show and event booking entities. Where possible, n-depth personal interviews were conducted with individuals responsible for decision-making on placement of shows in targeted U.S. markets and in indoor venues within those U.S. markets.

Touring show entities from which primary and secondary market information and commentary was extracted are as follows:

- Vee Corporation (family show specialists – *Sesame Street Live!, Kidz Bop, Care Bears, Curious George, Barney, My Little Pony, Dragon Tales, Bear in the Big Blue House*);
- NAC (broadway show specialists);
- Live Nation (indoor and outdoor music show specialists);
- Hanneford Circus;
- Harlem Globetrotters;
- Feld Entertainment (*Ringling Bros. Circus, Disney on Ice*, Disney stage shows, dirt shows);
- Magic City Productions;
- Other promoters and event types.

Vee Corporation: Vee Corporation acts as producer of live touring family shows, including international tours, live performances, theme park shows, national tours, character events, and live stage shows. *Sesame Street Live!, Kidz Bop, Care Bears, My Little Pony,* and *Dragon Tales* are currently highlighted shows in their inventory. The opinion of multiple Vee representatives over the past decade is that in the North Country and Central New York market, there are not enough quality buildings, and that there are not enough available dates at the facilities that do exist. *Sesame Street Live!* used to play in Syracuse at the War Memorial in the 1980s, but has used the Civic Center most recently. A 2,500-seat capacity is optimal for current Vee Corp. shows, but 1,500-4,000 seats is a workable range, assuming that a long enough run of shows (typically 5-7 over a 3-5 day run, including a Saturday-Sunday weekend) is possible at the building.

The Vee Corp. shows typically negotiate a co-promotion partnership deal with the building in which the building itself assumes financial performance risk, that is, the show carries its own production costs, the building in turn carries its own costs for hosting the show, and ticket receipts are then split on some percentage basis between the show and the building.

In Central New York, Vee typically routes in February-March, and would look for a Friday-Sunday run that would include 5-7 shows.

NAC (Binghamton, NY): NAC places and produces live Broadway show entertainment in major markets throughout New York State, and currently in Buffalo, Rochester, Syracuse, Binghamton, Elmira, and also in Erie and Scranton, PA. Representative 2013 shows that NAC has scheduled in NYS include *West Side Story*, *Peter Pan* (w/ Cathy Rigby), *The Addams Family*, and *Dixie's Tupperware Party* (all Syracuse), and *Dream Girls, Rain* (Beatles tribute), and *Catch Me If You Can*, (all Binghamton). NAC has indicated in the past that in the Central New York region, Syracuse is a "fine" market for Broadway shows and that it is loyal to its history in that market. Currently, NAC schedules an annual Broadway series at the Crouse-Hinds Theater at the Oncenter, which it indicates is very acceptable from a general technical standpoint and has a "great" stagehouse, but which NAC also indicates would be more attractive if it had 400-500 more seats available.

The Broadway shows that NAC deals with have very high production demands and expectations, which are met almost exclusively by true theatrical facilities with permanent proscenium stages, orchestra pits, and substantial stagehouse capabilities. Because pure theatrical facilities are optimal for NAC-produced events, so the type of "enhanced events center" contemplated by JCC is likely not of an adequate design or functional capability for NAC needs.

Live Nation: Live Nation is the dominant concert promoting entity in the U.S., and has a Buffalo-based office that is responsible for booking indoor and outdoor live music shows in Buffalo, Rochester, Syracuse, and Albany. Live Nation has indicated that a 5,000+-seat capacity at an JCC venue would be acceptable from a possible gross ticket sales standpoint, but that a facility at that size would not be measurably different from other available venues already south of North Country in the Syracuse market facility inventory, and that lack of familiarity with the ad and p.r. market in North Country most likely would be a consideration that might minimize Live Nation interest in the market.

Live Nation has developed a strategic relationship with the K-Rock Centre (Kingston, Ontario), a relatively new venue in the Canadian market that, as a true arena at 6,700 seats, both co-promotes with and rents out to touring acts and shows. The facility is professionally managed by SMG, and was recently recognized by *Pollstar* magazine as Canada's best venue under 8,000 seats based on ticket sales (51,805 tickets sold) thru the 3rd quarter of 2012. Live Nation shows scheduled in Kingston in 2013 include Diana Krall, The Price is Right (live stage show), Marianas Trench, Carrie Underwood, Great Big Sea, and Sting (all K-Rock Centre), and Boyz II Men (The Grand Theatre).

Live Nation has historically indicated that it finds Syracuse and Central New York to be a difficult live music market within which to work, and has up until recently booked Syracuse club dates and a few theater shows only, with no larger venue dates scheduled. Currently, there is a Miranda Lambert date scheduled at the Oncenter for April 18, 2013. It can be inferred that the Oncenter's new relationship with SMG has

resulted in a more aggressive effort on behalf of the market and its professional facility representatives to secure programming for the Oncenter complex. Additionally, Live Nation is promoting Celtic Women at the Landmark Theatre in March; this indicates that Live Nation may be looking more favorably at the CNY market across its current inventory of scaled venue sizes, which might bode well over time for a North Country concert market.

Hanneford Circus: The Circus has a 38+ year history in the U.S. It currently has two arena/indoor tours on the road, and it can also install temporary "big top" tents when no indoor space is available. According to its longest-standing tour personnel, the Hanneford Circus has not been to the Syracuse or Central New York/North Country market in 25+ years. Seating capacity in excess of 4,000 is optimal for venues that the Circus does book. Typically, the show schedules a total of 8 shows in 3 days at a venue, including an entire weekend. Back of house capability is a key consideration for the show – this includes adequate spaces that can act as holding areas for animals, as well as immediately proximate parking for large vehicles.

In 2013, Hanneford Circus event locations in NYS are currently identified as White Plains (Westchester County Center, February), Elmira (First Arena, May), and Binghamton (Broome County Veterans Memorial Arena, May).

Harlem Globetrotters: The Globetrotters have multiple tours ongoing in the U.S. at any given time, and can cover the northeast, the southwest, and the northwest simultaneously. Q1 of 2013 has one of their tours playing the northeastern U.S., with NYS arena dates at the First Niagara Center (Buffalo), BlueCross Arena (Rochester), the Carrier Dome (Syracuse), and the Times Union Center (Albany).

The Globetrotters have indicated in the past that the facilities in Central New York are old, and that the market could be well-served by a new indoor facility or facilities. Up until 2013, the Globetrotters had played the Oncenter in Syracuse exclusively, but had indicated that the building is very busy with other events, that it is hard to get weekend dates there, and that the market, in its opinion, deserves to have the Globetrotters play a weekend date (as opposed to a weeknight date). It has indicated that "one-off" shows have a tough time getting more attractive and lucrative dates in Central New York at the Oncenter specifically and in the Syracuse market generally; it can be inferred that because the show booked the Carrier Dome in 2013, this larger venue option helped to eliminate this traditional CNY scheduling issue. Because the Globetrotters typically schedule and route dates across all major markets New York State, Central New York does route well for the Globetrotters show.

Feld Entertainment (Ringling Bros.): Feld Entertainment currently owns or has the right to representation of the Ringling Bros. and Barnum & Bailey Circus, Feld Motorsports, Disney on Ice, and Disney Live! Ringling is the dominant touring circus show in the U.S., with two identical 3-ring touring companies routing throughout the U.S. Currently, Ringling schedules shows in Syracuse at the War Memorial. Typically, Ringling will look

for a 5+ day run at an indoor venue, with 7-9 specific shows scheduled within that period. The show books buildings 2+ years out on its routing calendar.

Ringling has some of the most unique, specific and demanding technical requirements of any live indoor entertainment events traditionally booking indoor venues. Its 3-ring shows, which fit most major indoor arena venues, have very demanding rigging, flooring, and back of house requirements.

Additionally, Ringling negotiates very tough contracts with venues, including the ability to restrict building concessions and merchandise sales. This tends to limit the building's revenue-generating opportunity from the Ringling shows. The Ringling position typically is that the prominence of the Ringling Bros. circus provides a marketing benefit to any building at which it plays, and that the building becomes more attractive to other potential users as a result of its circus playing there.

Relatively new additions to the Feld stable of shows include multiple "dirt" show concepts, including monster jam, arena cross, and supercross events. The new "Nuclear Cowboyz" indoor arena show features trick dirt bike riding.

In 2012-2013, the Ringling Bros. circus played in NYS in Rochester (BlueCross Arena, October '12) and Albany (Times Union Center, May '13).

Magic City Productions (Endicott, NY): Magic City Productions is an independent "boutique" live event promotion operation headquartered in the Binghamton, NY area. Magic City has a business footprint that encompasses primarily the NYC-NYS southern tier geographic area. While its event offerings seem to be of a limited number on an absolute basis, it does offer a consistent roster of know acts primarily at indoor venues in NYS. Currently, the only indoor show being marketed by Magic City is Matchbox Twenty, playing the Mid-Hudson Civic Center in Poughkeepsie, NY in March.

Other Event Types: In addition to the event types and show promoters identified above, other high-profile "branded" events and lower profile events are available for indoor arena and events center play. WWE wrestling continues to book indoor events throughout the U.S., typically in larger indoor venues in order to accommodate live TV or pay-per-view telecasting. Smaller wrestling shows, typically of a geographically-regional nature, are also available within this category.

Professional bull riding (PBR) is another event type that has cache in certain targeted U.S. markets. Their "Built Ford Tough" series plays almost exclusively at larger indoor arenas with seating capacity of 12,000+.

Financial Performance Modeling

Assuming that the JCC events center development project is intended to include (1) a multi-purpose events center component, (2) an indoor turf field component, and (3) a higher education center component, it is possible to create assumptions for each

component, and especially for the first two, that allows for construction of an integrated financial performance model that provides an estimation of annual performance based on projected event counts, revenues generated from those event counts, and operating expenses incurred in order to run the facilities such that they are able to generated the projected events and revenues.

As the most high-profile and intricate of the three proposed project components, the events center component required the most detailed analysis, and integration of qualitative and quantitative inputs provided by target user, market, and public assembly facility industry research. This work resulted in the development of three operating scenarios that are scaled based on increasing (or decreasing) key assumptions in the areas of total number of annual events, and building rental rates applied by event category to the annual number of events projected. Base assumptions that remained stable and which were applied to each of the three scenarios were as follows:

- Assumes in-house facility management that includes public assembly facility professional expertise (and the upper-level staff cost that is commensurate with same);

- Assumes that certain annual operating expenses (esp. cleaning supplies and equipment, landscaping, repairs and maintenance, security contractors, service agreements, and uniform cleaning) are not borne by the facility, but are included in the general JCC annual operating budget;

- Assumes that targeted event categories that capture individual event types will be as follows:

  Family shows
  Sporting events (collegiate)
  Sporting events (Section X)
  Sporting events (professional and exhibition)
  Concerts (large and small)
  Conferences, meetings, flat shows
  Miscellaneous (graduations, camps, religious, speakers, comedy acts, other)

Table 10 provides an indication of events center financial performance under three scenarios, differentiated by annual event counts and rental rates. Rental rates for the aggressive scenario are consonant with and consider those charged by multi-purpose venues of similar size, by venues within the Syracuse market, and by the rate card currently in place at SRC Arena.

Table Ten – JCC Events Center Financial Performance Scenarios

	Aggressive	Moderate	Conservative
# Annual Events (all types)	133	93	93
Attendance (all events)	218,950	155,900	155,900
Rental Income from Events	$385,750	$252,000	$241,084
Total Ancillary Income	$740,621	$527,998	$527,998
Total Event Income	$1,126,371	$779,998	$769,082
Total Other Income	$409,420	$310,625	$310,625
Adjusted Gross Income	$1,535,791	$1,090,623	$1,079,707
Total Indirect Expenses	$809,000	$809,000	$809,000
Net Income	**$726,791**	**$281,623**	**$270,707**

Table 10 indicates that net projected income drops dramatically as annual event counts decrease between the aggressive and moderate scenarios, and as rental rates are decreased by 50% between the aggressive and moderate scenarios. The net income figure drops far less dramatically between the moderate and conservative scenarios, as event counts are held constant but conservative rental rates are decreased to 33% of those utilized in the aggressive scenario.

For purposes of discussion and comparison, the fieldhouse component of the overall project can be isolated as a separate business operation, with a dedicated annual operating budget that is distinct from that of the events center. In this case, two scenarios have been developed for the fieldhouse operation that are called "conservative" scenarios, with the distinction being that the second iteration of the conservative scenario assumes an absorption of certain operating expenses (i.e. janitorial services, utilities, insurance, building/grounds maintenance, snow remover/lawn care, garbage removal) by JCC.

Key rent and utilization assumptions for these conservative include use of a single large turf field dividable into three separate side-to-side fields, with 1/3 field rental rates of $65 per hour for non-prime time and $95 per hour for prime time, and in-season use levels of 10% (weekday off-prime), 80% (weekday prime time), and 90% (weekends). Additional assumptions include no building debt service, and no real estate taxes paid.

Table 11 provides an indication of the net cash flow differences between these two fieldhouse operation scenarios.

Table 11 – Fieldhouse Conservative Scenarios – Full vs. Shared Expenses

	Revenues	Expenses	Net Cash Flow
Conservative – Full Expense	$495,205	$433,155	$62,050
Conservative – Shared Expense	$495,205	$150,855	$344,350

Table 11 indicates that net annual cash flow under a full expense scenario would be $62,050, while net cash flow under a shared expense scenario would be $344,350.

The significance of the fieldhouse financial performance estimations is that if positive net cash flow figures can in actuality be attained by the fieldhouse, that positive annual cash flows can then be committed to helping to offset any net income shortfalls that might occur at the events center operation, which is likely to have financial performance projections that in reality are more tenuous and subject to negative market impacts than is the fieldhouse operation.

A final consideration is the determination of rentable space that may be available for lease in the Higher Education Center (HEC) component of the overall project. Current JCC estimates of projected rental revenues from current and anticipated project "partners" total $225,000. If realized, this rental figure can also be added to net cash flow/income from the proposed events center and fieldhouse components, in the event of any net income shortfalls that might be actually realized by one or both of the facilities.

Summary Comments – Section Three

The marketability analysis of the JCC new events center study identified a number of key considerations that have been prevalent since Paradigm began assessing facility development opportunities for the Jefferson County market. While community interest is high in the market for a new multi-purpose facility, the market is relatively small and isolated compared to other NYS markets, and rental rates for using local venues (State Office Building, ice arena, other) remain low and set a rental rate baseline that is below that which a new facility would have to institute in order to establish an annual operating budget that might have a chance at achieving break-even financial performance under certain circumstances. That said, the opportunity to have such an events center developed, owned, and operated by JCC affords the community a unique opportunity for considering the development project, despite some of the apparent market challenges that are present.

Additionally, consideration of additional project components (fieldhouse, HEC) that might be able to generate incremental net income that could be applied to the events center annual operating budget as a buffer against operating deficits, is a distinct advantage that this analysis has over previous Jefferson County facility development concepts.

The deliberation between new ice sheet vs. fieldhouse component can be quickly resolved, when one considers (1) cost to build, (2) cost to operate, (3) utility of the space to JCC and especially its athletics program, (4) estimated impact (i.e. total annual volume of users) within the regional recreational sports community, and (5) comfort level that projected users would have in paying at or close to rental rates that would cost-justify the annual facility operation. This comparative analysis indicates that the fieldhouse component is a more beneficial qualitative and quantitative fit for JCC, its campus, and the regional rec sports community at this time than is a second sheet of JCC-controlled ice.

In the area of multi-purpose utilization opportunity and expectations, the events center component, at a seating capacity of 5,000+ and with a staff and operating expenses commensurate with an expectation of aggressive multi-purpose use and attendance, would be untested within the Jefferson County market. While local promoters do have experience working within the regional indoor and outdoor entertainment market, their financial exposure has been relatively limited (by virtue of extremely low facility rental rates incurred) when compared to rates that would be necessarily in place at a new facility with market-rate industry expenses to cover.

That said, the increased seating capacity available to local (as well as non-local) event promoters affords them an opportunity to significantly increase their "gross" from ticket sales and ancillary income generated by their events. Therefore, the ability of event promoters to afford the facility, and to generate an acceptable financial return by promoting live events at it, hinges on their ability to accurately gauge the regional ticket-buying market and to maximize delivery of programming to that market via effective marketing of, public relations for, and advertising of available events.

On the fieldhouse side of the development project, an analysis of NYS counties indicates that based on a per capita assessment, Jefferson County is underserved by large-field indoor turf facilities (i.e. the YMCA) when compared to both smaller and larger NYS counties.

Quantitative analysis of projected facility complex component operations indicates that a net positive cash flow position for each may be attainable under certain market conditions and using certain sets of primary and secondary assumptions. That said, the acceptance of assumptions related to rental rates, reimbursable event expenses, and so on, may be problematic to judge. The events center component is certainly the most difficult element of the overall project to project out from the standpoint of annual events, attendance, and operating revenues.

By comparison, the fieldhouse component is much more simple to evaluate, and it is likely that assumptions and projected annual operating revenues and expenses can more accurately be estimated for this component. In the event that this is the case, it would seem that an annual net positive cash flow, if generated by the fieldhouse, could be assigned to the events center operating budget so as to help offset any operating deficits that might result. The availability of rental income generated through HEC leases, if realized at all and in the amount projected by JCC, would further aid in creating a stronger comfort level for JCC as it relates to annual and ongoing financial performance of the overall development project operation.

IV. IDENTIFICATION, EVALUATION AND COMPARISON OF FACILITY MANAGEMENT OPTIONS AND PREFERRED MANAGEMENT SCENARIOS

Assessment of Business/Management Model Scenarios

Year-round, fully-active, multi-purpose indoor "events center" facilities can contemplate both in-house (and dedicated) facility management, as well as outside management company scenarios. Decisions in the area of management model identification and selection take place along a continuum based primarily on anticipated annual activity levels, the nature of that projected activity (or activities), and the amount of annual revenue targeted, needed, or projected from the booking, scheduling, and successful delivery of those targeted (and typically outside) events.

As an example, Onondaga Community College has hired an outside public assembly facility industry professional with 20+ years of hands-on operations and management experience as an in-house building manager; he and a full-time staff of two are currently charged with making the SRC Arena events center a competitive multi-purpose ticketed event venue within the Onondaga County and Central New York market.

As a counter example, RIT has chosen to install a more athletics-oriented facility manager as an in-house employee to market to and address the needs of outside rentals (i.e. local high school sports, academic-oriented multi-day events such as "technology wars") for its new "traditional fieldhouse" facility; however, their stated orientation for the facility is on multi-day special events, not hourly rentals, as their new fieldhouse is typically reserved for a multitude of on-campus users and program uses during the academic year, with intercollegiate athletics as the clear scheduling priority.

Within the three facility types that have been contemplated for the JCC development project – "enhanced fieldhouse" (or events center), indoor skating rink, and/or indoor turf field center – a selection of the specific NYS-based facilities that have been identified and evaluated within each category can be assessed based on their management model type and structure.

NYS-Based Fieldhouses ("traditional", "enhanced", "event center"):

- RIT – University building manager, independent from athletics, has no revenue-generating directive, outside event activity is not a priority;

- SUNY Canton – Operations director functions separate from athletics department, has marketing and scheduling responsibility for outside users and events at ice rink and fieldhouse, but has no revenue-generating directive, outside event activity market is not a priority, but skating schedule is open and somewhat active;

- SUNY IT – Athletics is a building tenant, rec and intramural activities schedule is a priority at facility, campus events (commencement, graduation, other) are extent of outside events. Building schedule is managed by non-athletics campus administration;

- OCC – Three-person dedicated building staff oversees operation, management, booking, and events management based on $500,000 annual operating budget, with expected annual revenue return of $800,000-$1,000,000+. Athletics, rec, and intramural programs are all secondary considerations to outside events and revenue generation;

- Mohawk Valley CC – Fieldhouse operation, scheduling, maintenance is overseen generally by campus operations, with athletics program schedules and access as the scheduling priority;

NYS-Based Indoor Skating Facilities:

- The Sports Centre (Rochester) – Original building management was provided by first ownership group, facility is now on 2nd outside management company, contracted with for comprehensive management services by the facility's private non-profit facility oversight committee;

- Northtowns Center at Amherst (Buffalo) – Town of Amherst rec department now runs facility, following expiration of original management company contract with Delaware North Companies;

- The Community Center (Ithaca) – Private non-profit has three-person in-house fulltime staff, staff runs two turf fields and single ice sheet year-round on $700,000+ operating budget;

NYS-Based Turf Indoor Turf Field Facilities:

- Syracuse area – All actively-marketed indoor turf field facilities in Syracuse market are privately owned and operated;

- Rochester area – All actively-marketed indoor turf field facilities in Rochester market are privately owned and operated;

- Buffalo area – All actively-marketed indoor turf field facilities except one (Paddock Dome, Town of Tonawanda) are privately-owned and operated;

- Albany area - All actively-marketed indoor turf field facilities in Albany market are privately owned and operated, with one owner (Afrim's) having multiple indoor locations.

If JCC project research indicated that activity levels and/or annual revenue estimations warranted, it has been contemplated that dedicated in-house facility staff under an "enterprise" business model might be in order for a proposed JCC "enhanced fieldhouse" events center project, not unlike the existing OCC business/management model at its SRC Arena. Based on comprehensive project research across all three facility types and the development of realistic marketability, financial performance, and operations assumptions based on that research, it would seem that an "enterprise operation" utilizing a dedicated staff having a specialized skillset is in fact worthy of consideration for the events center component at least of the overall JCC facility development project.

First, along with providing to the school a new indoor on-campus facility that will enhance intercollegiate athletics and other on-campus activities from a scheduling and delivery standpoint, the *key "reason for being"* for the proposed events center component of the overall facility development project is for it to *serve as a primary congregating location for special events for the regional population in general*, through the booking, scheduling, hosting, and successful delivery of "ticket entertainment" and similar activities that both target and serve a wide variety of economic and demographic subsets within the Jefferson County market.

Paradigm's industry experience in this area indicates that doing this successfully in a sustainable way and on a consistent, long-term basis, in most cases requires the experience and expertise of a qualified public assembly facility professional capable of overseeing an "events center" staff and business operation, integrating with the owner/school's intercollegiate athletics department, and interfacing aggressively and constructively with the domestic live event and touring entertainment industry. These types of industry professionals *generally are not found* amongst campus staff and administrators, or within traditional intercollegiate athletics departments.

Additionally, assumptions related to annual operating budgets and income generation indicate that an "events center" building, if positioned and operated so as to be aggressive and competitive in a true public assembly facility world and with a true public assembly facility intent, will have mid to high six-figure dollar amounts attached to both annual operating expenses and annual revenue targets; to manage these budgets and to generate these revenues, specialists most likely will be required at least at the facility director level to both effectively get the facility on the public assembly facility "radar", and to also effectively manage fulfillment of public assembly facility industry needs and expectations in the area of facility booking, ticket sales, event management, and similar.

With respect to the indoor turf field component, preliminary operating and financial performance assumptions in this area indicate that under some certain set of expense and operational circumstances the turf field operation has some opportunity to be a net positive income generator for the overall facility complex. That said, as indicated in previous sections of the JCC feasibility study, the marketing and management of an indoor turf surface facility that is utilized primarily for indoor soccer training, leagues, tournaments, and the like, as well as for other regionally-popular team sports such as

lacrosse, requires the type of specific soccer- and other fields sports-based marketing, program development and program management experience and expertise that an indoor skating facility (which generally operates as more of a "rental hall" than does a turf facility) typically does not require.

Project interviews have indicated that there is a seasoned amateur-youth soccer community in North Country, and that from this community there may be capable, local, and available individuals who can assume some degree of responsibility for ongoing management, marketing, and program development at regional indoor turf field facility located at and operated in conjunction with a new on-campus JCC indoor sports, recreation, and entertainment complex.

Overall new facility business model options for inclusion of such "soccer-centric" management expertise might be as follows:

- Create position(s) within "events center" staffing model that is specific to turf field management and oversight;

- Create position(s) within athletics department that is specific to turf field management and oversight, and that interacts with dedicated "events center" management;

- Consider lease arrangement with outside soccer management entity that makes turf field "enterprise" legally responsible for overall turf field operation and operating budget, with JCC athletics participating as a priority tenant at facility.

Summary Comments – Section Four

The two key revenue-producing components of the JCC events center project – the events center proper, and the indoor turf field operation – have been identified, analyzed, and targeted based on (1) their compatibility with JCC on-campus and well as local/regional program use and live entertainment and local event needs, and (2) their ability to generate some level of annual operating revenues that will to some degree support annual facility operations such as to make the overall enterprise operation as financially self-sustaining as is possible within the opportunities, limitations, and economic, demographic, and competitive facility characteristics of the regional market.

To this economic performance end, there are identifiable management models and scenarios for the project which can be assessed so as to determine the degree to which they align with overall management, operations, marketing, program, and financial performance goals and objectives established for and perhaps required by the project.

A variety of management models are available to JCC for consideration, including everything along a spectrum from completely in-house (i.e. athletics department, or other campus office or department) management, to engagement of an outside private management company (of which there are some by not many U.S.-based options). SUNY Canton (in-house), Binghamton University (in-house), and OCC (in-house, but with actual public assembly facility expertise) represent some of the options available to JCC. Generally speaking, as the level of events center projected annual event, attendance, and income potential expectation increases, the level of facility management expertise increases. In essence, there typically is a direct X-Y axis graphical relationship between facility expectations, and facility management expertise required to meet those expectations.

Professional and experienced expertise comes at a price. Management companies in particular require an annual fixed management fee, plus a financial incentive. However, in smaller markets, smaller buildings, etc., their expertise typically produces diminishing returns per dollar spent for that expertise. In such cases, enough professional expertise can oftentimes be brought in-house through the engagement of an identified outside industry professional (see OCC), as opposed to an entire management company. In most cases, such person-specific professional experience is not found on traditional college and university campuses, particularly if they do not have a history of major sports-rec-entertainment venue ownership and operation.

A critical consideration for JCC is the "how" of how a facility operation and the management of the operation will be successfully integrated into overall campus operations. As one or more revenue-generating facilities on campus will likely be atypical for the historical campus operation, considerations in the areas of operating budget establishment, accounting and accountability, staffing, lines of reporting, clear identification of authority and responsibility within the business model and organization chart as they both relate to overall JCC operation, etc., must be critically and completely thought through, and options, considerations, and ramifications comprehensively understood. This effort will in turn impact the ability of the selected management option model to be effectively implemented in the long-term.

V. ECONOMIC IMPACT ANALYSIS

Projected economic impact for a community can be an important consideration in the decision-making process utilized to consider the making of a significant economic development investment in a recreation/entertainment-based development project and its long-term operation. In fact, a strategic objective expressed over the years by the Jefferson County market for the study project was and within the scope of this feasibility study is to specifically ascertain the quantifiable benefits of the project, as determined by rigorous input-output economic impact analysis.

In that effort, Paradigm undertook a comprehensive analysis of the overall regional economic impact that a new sports-recreation-live entertainment-based facility development/operations project might generate for the Jefferson County market, so that this estimation could be integrated and measured against the estimation of overall JCC development project potential and economic self-sufficiency.

A. Key Areas and Assumptions Test

The assessment of overall economic impact generated by a new JCC facility development project and its future ongoing operation contained the following key elements:

- Determination of economic impact generated by construction and business operations within the market;
- Measurement of direct, indirect, and induced effects generated by the project; and
- Determination of economic output, labor impacts and fiscal impacts generated by the project.

Introduction and Impact Summary

Any economic impact generated by the proposed JCC facility development project can be attributed to two distinct occurrences:

1. Construction - a one-time only event that we are assuming for purposes of this calculation would take place within the next 2-5 year period; and
2. Operation of the facility - ongoing business operation at relatively stabilized levels (i.e. consistent revenues, expenses).

Method of Analysis

The input-output multiplier approach was used to estimate the economic benefits related to the construction and operation of the proposed exhibit facility. In performing these analyses, direct spending in the relevant economy (defined as Jefferson County) was estimated. Then factors were used to estimate the multiplied effects of this spending on output and employment in the economy. Economic impact or benefits are traditionally expressed in terms of increases in sales volume, employment, income and fiscal revenues.

The economic impacts estimated in this report consist of construction (temporary) and operating (permanent) impact. The method of analysis is similar for both phases for the purpose of determining the impacts on: economic output, employment, income and fiscal (or tax) revenue.

Economic *output* is the spending in the economy related to the proposed facility's operations and development. This measure of economic activity includes direct spending plus re-spending generated through the multiplier effect. Jobs created in the economy, measured in full-time equivalent jobs (FTEs), as a result of the economic output directly related to the proposed facility's stabilized operations and construction and indirectly related through the multiplier effect is *employment* impact. *Labor* impact represents both employee salaries and wages plus business bonuses and commissions and the like.

Limitations of Input-Output Models

To quantify economic impact in each case, we utilized IMPLAN, an input-output model to derive multipliers. There are two fundamental limitations of input-output models:

- It is generally assumed that no substitution across expenditure categories occurs, when in fact, substitution does occur. If residents would otherwise have spent dollars on other local activities versus in association with the proposed facility, it could be argued that a facility would not be responsible for any increase in local spending.

  Conversely, if "facility dollars" spent by local residents would otherwise have been used for activities outside the local area, then these dollars do not merely represent displaced spending, but without the proposed facility, the area would continue to lose these funds. In other words, it is assumed that none of the spending amounts used as inputs for the models represent "displaced spending" or that without the proposed development, incremental business activity generated from events utilizing a new facility would take place outside of the State.

- Second, it is assumed that excess capacity in business employment does not exist. In other words, if area enterprises employ sufficient staff to accommodate a larger volume of sales, it is unlikely that a higher level of sales will cause additional employment.

Impact Levels

Economic impact is typically measured on three levels. As defined by the IMPLAN model, these are:

> *"Direct Effects* - the impacts (e.g. changes in employment) for the expenditures and/or production values specified as direct final demand changes;
>
> *Indirect Effects* - the impacts caused by the iteration of industries purchasing from industries resulting from direct final demand changes; and
>
> *Induced Effects* - the impacts on all local industries caused by the expenditures of new household income generated by the direct and indirect effects resulting from direct final demand changes. Induced effects may also reflect government or investment expenditures."

Economic impacts or benefits are traditionally expressed in terms of increases in sales volume, employment and income resulting from the "export" of goods and services from and the "import" of new spending into an economy.

> Economic output is the spending in the economy related to the proposed facility's development and operations. It represents changes in sales volume or increases in a region's local aggregate economic activity resulting from new dollars "imported" into an economy. In other words, it is the total dollar flow of the major economic sectors (wholesale, retail, manufacturing and service) and is generally equivalent to the gross product of a given area. This measure of economic activity includes direct spending plus re-spending generated through the multiplier effect.
>
> Because of the changes in sales volume, local enterprises, depending on their excess capacity, may need to hire additional employees. Jobs created in the economy, measured in full-time equivalent jobs (FTEs), as a result of the economic output directly related to facility operations and construction and indirectly related through the multiplier effect is employment impact.
>
> Labor impact (often referred to as "Personal Income") represents changes in County residents' earnings resulting from increased employment and spending due to the "import" of new dollars into an economy.
>
> Fiscal impacts or benefits refer to new tax revenues resulting from economic impacts. Fiscal impact includes tax revenue generated from direct exhibit facility related expenditures (including increased area visitation) and indirect expenditures through the multiplier effect.

The Multiplier Effect

Economic impacts from operations of the proposed JCC facility complex are defined as total expenditures generated from facility visitors ("direct spending") and the indirect benefits which result as these dollars are re-spent within the area. These indirect benefits that result from subsequent rounds of spending are often referred to as the "multiplier" effect.

The multiplier concept recognizes that income is spent in successive rounds within a community and that these "chain reactions" create an economic impact in excess of the original expenditure and employment levels. For example, each dollar collected by the proposed facility will eventually recycle, or multiply itself, creating many levels of economic activity in an area. As a prospective employer, the proposed JCC facility project pays wages; these wage earners, in turn, make purchases from local businesses. As taxpayers, all businesses and individuals benefiting from or adding incremental revenue to the economy also confer revenue to the community in terms of taxes. As a consumer, the proposed JCC facility would buy goods and services from area businesses. Hence, the multiplier concept represents multi-level economic activity.

The multiplier effect is directly related to a region's geographic size, population and diversity of its industrial and commercial base. A larger population is generally able to support a more diverse economic base, and more products are likely to be manufactured and purchased locally rather than imported. Therefore, money injected into the economy is re-spent more often, causing greater changes in local business volume. In the case of the subject area, Jefferson County, the multiplier effects are somewhat more limited in that a significant portion of the impact might be felt by areas outside the County. For example, it is likely that, in large measure, the furniture, fixtures and equipment to be utilized for the proposed facility will be manufactured and shipped from areas outside of Jefferson County.

Economic impacts from sports-recreation-entertainment facility operations result primarily from spending by a relatively small number of "overnight" visitors and a far more significant number of local or regional visitors who drive in for the day and do not require hotel rooms. Many of these day-trippers are likely to be from neighboring communities or counties. Local day-trippers who would not visit the proposed facility were it not for the convenience of it being located in Jefferson County, do not generate economic impact because they would be likely to spend the money on something else if the facility did not exist, which is referred to as "displaced" spending.

Calculation of Direct and Indirect Impact

Construction Impact

Significant non-recurring benefits will be generated by the construction of the JCC facility complex due to major expenditures for labor and materials. Based on the most recent iteration of the Jefferson Community College facilities master plan, this study effort has determined to utilize a preliminary construction project cost of $12.3 million (Higher Education Center), $25 million (events center), and $7 million (indoor turf field facility or "field house") for a total estimated construction cost for the project of $44.3 million.

The direct expenditures of $44.3 million cause a "ripple" or "spin-off" effect, generating additional economic activity to numerous industries throughout the County. Using economic multipliers supplied by the federal government's Bureau of Economic Analysis, and an input-output model derived by the IMPLAN Development and Applications (alternatively referred to as "Minnesota IMPLAN Group", abbreviated MIG), the total economic impact, which includes the "ripple" or "spin-off" effect from direct expenditures resulting from the development of the proposed facility was quantified. Multipliers were developed for every industry; the degree of impact within each sector is affected by its relationship and synergy with the economic impactor.

2008 IMPLAN data for Jefferson County was utilized by the consultant team for the JCC project economic impact calculation, with figures converted to represent present day dollars. Applying the output, earnings and employment multipliers for the new construction expenditures across the various sectors of the Jefferson County economy yields the total direct and indirect impacts of the construction phase as shown in Table Twelve below.

Table Twelve: Building Construction Impacts

Impact Type	Output	Employment	Labor Income*
Direct Effect	$44,300,000	265.5	$12,189,323
Indirect Effect	$6,906,842	43.7	$2,121,041
Induced Effect	$4,684,567	39.3	$1,481,425
Total Effect =	$54,591,408	348.5	$15,791,790

*Labor income includes payroll as well as benefits

Table Twelve indicates that a construction project investment of $44,000,000 will generate an additional output (spending) impact of $11,591,409 within the county economy.

As a result of the construction project, a total of 349 jobs will be created and in place for the duration of the project. These jobs will have a resulting labor income impact of $15,791,790 within the local economy.

The magnitude of economic benefits from construction depends largely on the extent to which local laborers and suppliers are used for the construction project and how much the construction contractor depends on local resources. We have estimated that significant portion of the potential economic impact related to construction (primarily in the area of providing FF&E) will be shared to some extent with areas outside of Jefferson County.

It is also important to note that, while we have assumed that construction will take place over a minimum 12-month period, impacts can be delayed or accelerated depending upon the construction time frame.

Operations Impact

Our calculation of economic impact related to annual operation of the facility was based, in large measure, upon the projected financial performance of the facility at stabilization as outlined earlier in this report. A decision was made to measure economic impact based on projected revenues from the two target facility components. Aggressive scenario figures were used for the events center ($1,535,000 in adjusted annual gross income), and conservative figures were utilized for the turf field facility ($495,000).
By running these income figures through the IMPLAN model utilizing regional (Jefferson County) economic data supplied to IMPLAN by the federal government, we are able to calculate the total annual amount of economic impact generated by the revenue side of the JCC facility operation as articulated below in Table Thirteen.

Table Thirteen Operations (Revenue) Impacts

Impact Type	Output
Direct Effect	$2,030,000
Indirect Effect	$385,700
Induced Effect	$284,200
Total Effect =	$2,699,000

Table Thirteen indicates that at an annual revenue level of $2,030,000 between the two facilities, total economic impact within the county will be $2,699,900.. This represents $669,900 in indirect and induced impacts as generated revenue dollars flow through the regional target community.

Estimation of Tourism Impacts

Using attendance projections generated in the JCC events center scenarios, a manual calculation of potential direct economic impacts from special events held at the events center can be calculated.

The aggressive operating scenario for the events center operation indicates an expected attendance level of 218,950 annually from all 133 events hosted by the facility. If we assume an average daily spend of $150 for lodging, food, shopping, and gas for every adult attending events center events who are considered to be non-local and staying overnight, and if we assume that 10% of all attendees fall within this classification, then those attendees, 21,895 in number, can be expected to generate $3,284,250 in direct spending within the market, representing the "direct" component of a full economic impact calculation that can be generated using IMPLAN.

Summary Comments – Section Five

Measurement of economic impact can help to validate economic development project decisions from both a construction and ongoing business operations basis. By using recognized input-output modeling tools such as IMPLAN or RIMS, the larger economic impacts of development project investment and business operations success can be assessed and then utilized to help inform strategic decision-making as it relates to go/no-go decisions on any size of project and business operations investment.

As indicated by the IMPLAN model, a $44 million investment in a JCC events center construction project on the JCC campus in Jefferson County, NY, will have a total economic impact effect of $54,591,408 when direct, indirect, induced impacts are calculated and considered.

Similarly, projected events center and turf field complex operations generating a combined $2,030,000 in annual operating revenues will have a total economic impact effect of $2,699,000 when direct, indirect, and induced impacts are calculated and considered.

While not a specific component of the study scope of services, the direct impact of potential "tourism spending" generated by attendees at the events center can be calculated manually using estimations of daily per capita spending. 10% of non-local attendees staying overnight when they attend events would spend $3,284,250 if a daily spend rate of $150 was applied to each. This impact calculation could be refined and run through the IMPLAN model, if surveys were conducted of visitors to the Jefferson County market so as to capture their actual expenditures for lodging, food, retail spending, and entertainment.

STATE UNIVERSITY OF NEW YORK
JEFFERSON
There's more here.